MERCURY USER GUIDE

Version 0.5

12-17-2017

Table of Contents

Chapter 1: Mercury Overview

1.1 Guide to using this Guide

The Mercury User Guide is divided into four chapters. The first introduces the system, its basic terminology, and gives example configurations. This is the best way to understand Mercury as a system. All users are encouraged to at least scan through this section.

The second chapter, “Assembling and Configuring Mercury,” is useful when you want to make changes: adding a new lens or type of back, or more radically changing your Mercury configuration. However, if your Mercury is already assembled, and you only plan on using one config, you can skip this chapter for now and come back only when considering additions and changes.

The third chapter, “Shooting with your Mercury” teaches you everything you need to *use* an already configured Mercury. It contains both general information on fully manual photography and specific instructions for Mercury users. Anyone new to medium or large format photography is encouraged to read this entire chapter. Others may wish to skim for parts that relate directly to their Mercury config.

The final chapter is intended for those who are ready to expand their Mercury, offering various suggestions. It also includes a section devoted to making new Mercury components or collaborating to bring your ideas to Mercury.

1.2 Introduction

1.2.1 The Mercury Concept

Mercury is not a camera. Depending on your perspective, it is either an infinite set of *potential* cameras, a library of ever-expanding parts, or an open system for coupling optic and recording mediums. This is why we cannot properly refer to Mercury in the singular. Mercury is fluid in both capability and time: it reaches into the past an incorporates nearly any photographic device or technology from history; and reaches into the future: it is capable of incorporating devices, technologies, and techniques that haven't been invented yet. Mercury components are open source and can be modified to meet any need. The Mercury system allows you to record images on any practical medium, from wet plates to negative film to digital to instant film, etc. Similarly, Mercury is radically democratic: anyone can extend the system to incorporate a more extensive set of technological nodes, new uses, and new aesthetics. Mercury will exist as long as there are users and makers who keep it alive. A 1000 year camera system? Perhaps, but not as an unchanged device—only as a flow that moves through the medial contours of whatever society is willing to mold it. Mercury is not a thing; it is a concept of radically open, distributed, incorporative maker media instantiated (for the moment) as a fluid set of image-making machines.

Nonetheless, if you want to take a photograph with Mercury, you will likely end up with a particular,

individual device capable of doing that in the way you specify. We refer to this singular device as a Mercury *configuration*. This bridging of Mercury as a fluid system with Mercury as a singular camera that you can use for a specific imaging task is the purpose of this guide.

1.2.2 System Diagram

The following diagram represents a view of Mercury's main modules. The resulting permutations of configurations are too numerous to represent, but some specific configurations are given in the next chapter.

As in all illustrations in this Guide, items depicted in blue are third party, while items in black are manufactured by Mercury Works.

Note: Some modules pictured are in the final stages of development and not yet available for purchase.

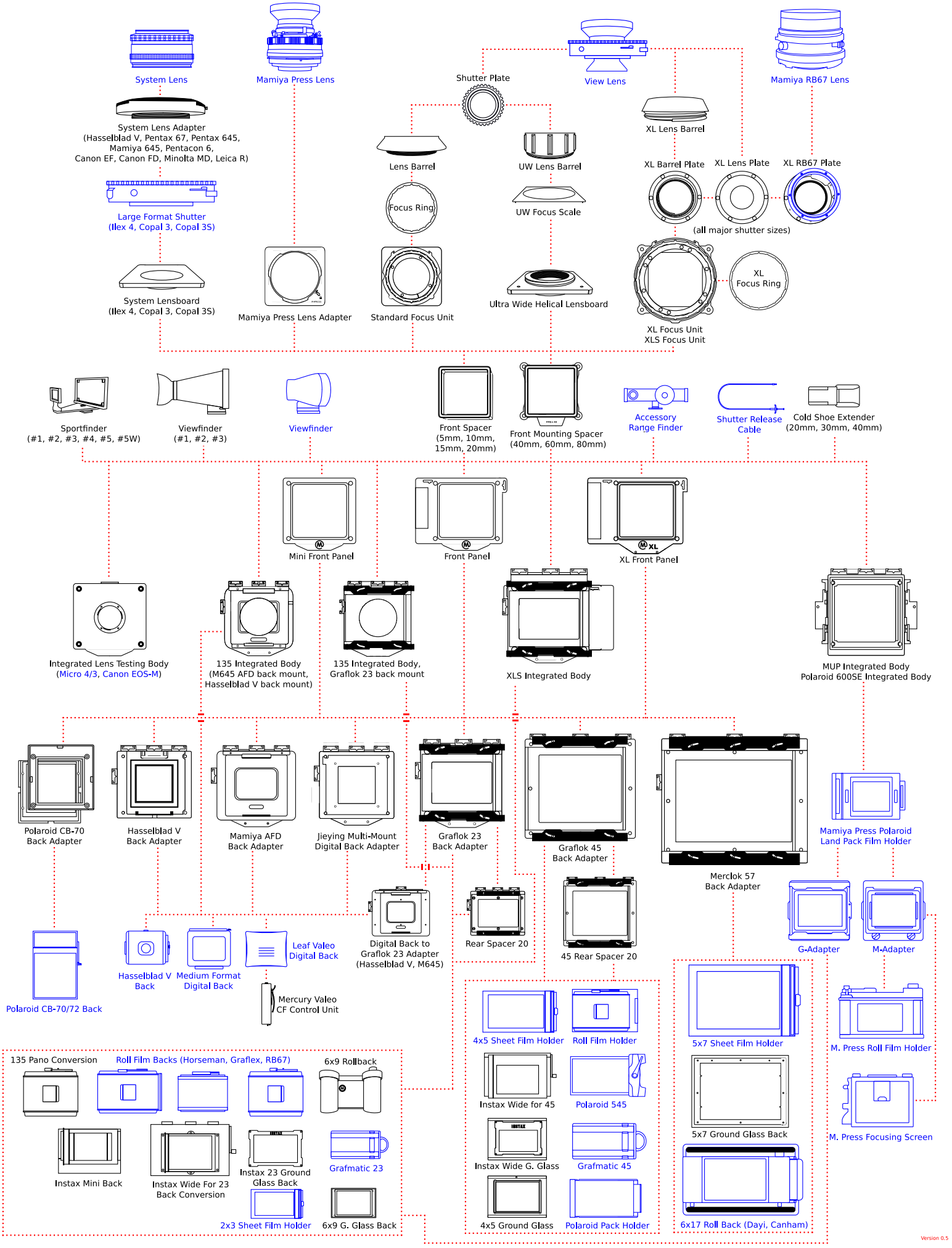
System Lens
Mamiya Press Lens
Shutter Plate
View Lens
Mamiya RB67 Lens
System Lens Adapter
(Hasselblad V, Pentax 67, Pentax 645,
Mamiya 645, Pentacon 6,
Canon EF, Canon FD, Minolta MD, Leica R)
XL Lens Barrel
Lens Barrel
UW Lens Barrel
XL Barrel Plate
XL Lens Plate
XL RB67 Plate
Large Format Shutter
(Ilex 4, Copal 3, Copal 3S)
Focus Ring
UW Focus Scale
(all major shutter sizes)
System Lensboard
(Ilex 4, Copal 3, Copal 3S)
Mamiya Press Lens Adapter
Standard Focus Unit
Ultra Wide Helical Lensboard
XL Focus Ring
XL Focus Unit
XLS Focus Unit
Sportfinder
(#1, #2, #3, #4, #5, #5W)
Viewfinder
(#1, #2, #3)
Viewfinder
Front Spacer
(5mm, 10mm,
15mm, 20mm)
Front Mounting Spacer
(40mm, 60mm, 80mm)
Accessory
Range Finder
Shutter Release
Cable
Cold Shoe Extender
(20mm, 30mm, 40mm)
Mini Front Panel
Front Panel
XL Front Panel
Integrated Lens Testing Body
(Micro 4/3, Canon EOS-M)
135 Integrated Body
(M645 AFD back mount,
Hasselblad V back mount)
135 Integrated Body,
Graflok 23 back mount
XLS Integrated Body
MUP Integrated Body
Polaroid 600SE Integrated Body
Polaroid CB-70
Back Adapter
Hasselblad V
Back Adapter
Mamiya AFD
Back Adapter
Jieying Multi-Mount
Digital Back Adapter
Graflok 23
Back Adapter
Graflok 45
Back Adapter
Merclok 57
Back Adapter
Mamiya Press Polaroid
Land Pack Film Holder
Polaroid CB-70/72 Back
Hasselblad V
Back
Medium Format
Digital Back
Leaf Valeo
Digital Back
Mercury Valeo
CF Control Unit
Digital Back to
Graflok 23 Adapter
(Hasselblad V, M645)
Rear Spacer 20
45 Rear Spacer 20
G-Adapter
M-Adapter
4x5 Sheet Film Holder
Roll Film Holder
5x7 Sheet Film Holder
M. Press Roll Film Holder
Instax Wide for 45
Polaroid 545
5x7 Ground Glass Back
M. Press Focusing Screen
Instax Wide G. Glass
Grafmatic 45
4x5 Ground Glass
Polaroid Pack Holder
6x17 Roll Back (Dayi, Canham)
135 Pano Conversion
Roll Film Backs (Horseman, Graflex, RB67)
6x9 Rollback
Instax Mini Back
Instax Wide For 23
Back Conversion
Instax 23 Ground
Glass Back
Grafmatic 23
2x3 Sheet Film Holder
6x9 G. Glass Back
Version 0.5

1.2.3 Basic Mercury Terminology

Mercury: The universal, modular, open camera system designed by Mercury Works.

Config: An individual configuration of Mercury consisting of a front panel integrated with a back adapter, a lens stack, and a back (either present or accounted for).

Front Panel: The central Mercury module. It isn't a full camera body until it is integrated with a back adapter.

Back Adapter: The module that mates on the rear side of the Front Panel. Each accepts film or digital backs of some kind.

Camera Body: A front panel integrated (bolted together with) a back adapter. Some Mercury "integrated panels" are already a complete body.

Lens Stack: Everything in front of the Front Panel. Usually consists of front spacers, a focus unit, potentially a lens barrel, a shutter plate, and a lens.

Shutter Plate: This is the part that mounts a view lens. On a large format camera this is equivalent to a "lensboard." However, Mercury shutter plates are not boards, but circular, threaded plates that screw into lens barrels or directly into focus units. They are speced by thickness and the shutter size that they can mount.

RS [value]: This is perhaps the key Mercury concept. RS refers to Rear Spacing and Rear Shift. Every Mercury config has an RS value. This is basically where the focal plane lies. An RS-0 config has the focal plane in the standard place (about 23.8mm behind the front of the Front Panel). An RS-30 config has its focal plane shifted 30mm farther back from the Mercury standard. The config's RS value is the sum of its back adapter's RS value and its mounted back's RS value. For example, a Mercury config consisting of a 4x5 RS-20 Graflock back adapter (there are three different RS versions of our 4x5 Graflok back adapter), would be at RS-20 when used with a standard sheet film holder or roll film back. But if you were to mount the Mercury Instax Wide for 45 (which has an RS value of 20) back on this camera, your config would then be at RS-40. Your lens stack and rear spacing must balance out, so changing from an RS-0 config to an RS-20, for example, requires that you remove 20mm from your front spacing. The Mercury View Lens Table gives, for any tested lens, both the standard RS-0 lens stack components and the components for various common RS values.

FS [value]: FS refers to front spacing. The FS value of a particular config is the sum of the values of individual Front Spacers. These come in the following units: 5, 10, 15, 20. So FS-25 could be achieved back stacking an FS-10 and an FS-15, or by stacking an FS-20 and an FS-5.

1.2.4 Front and Rear Spacing Example

The following example makes use of the same lens (the Schneider APO Symmar 120mm f/5.6) in two different configs, each with a different RS value:

Example of RS-0 (Standard) Config

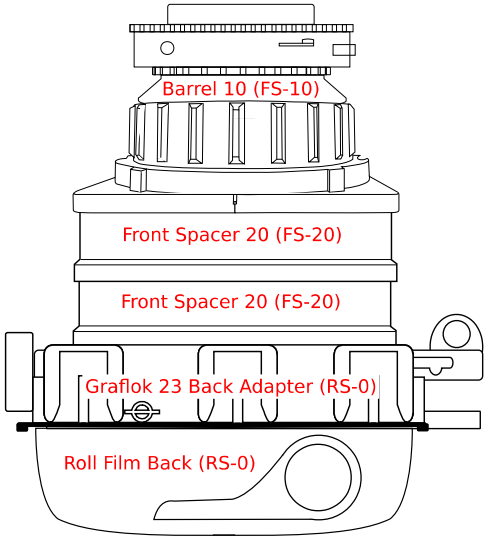

Example of RS-20 Config

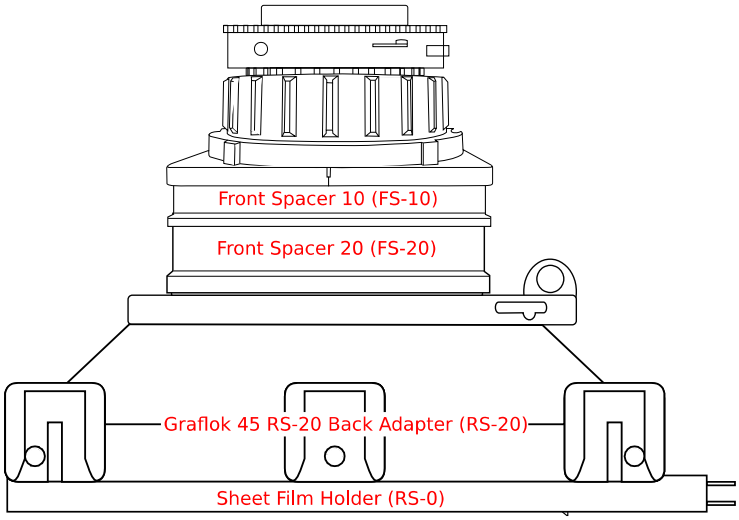

1.3 Basic Mercury Modules

1.3.1 Basic Module Descriptions

Lens: Generally a third-party component, Mercury can accept either view camera lenses (which contain two glass elements that screw into either side of a round “leaf” shutter) or system lenses (which typically have metal lens barrels with built in helical focusing, but usually lack shutters). Each type entails a different lens stack (set of Mercury modules).

System Lens Shutter Adapter: Necessary only for system lenses, this module is usually a hybrid of plastic and metal parts. It contains a mechanism to which a particular type of system lens (for example, Mamiya 645 or Canon EF) can lock. The back side of this module contains threads designed for a particular third-party shutter (often an Ilex No. 4 or Copal 3). This attaches the system lens (which lacks a shutter) to an auxiliary shutter for use with Mercury.

Shutter Plate/Board: For view lenses: This is a round adapter designed to accept a particular shutter, which attaches to it via its screw-on flange or retaining ring. The shutter plate also contains 58mm male threads which screw into a lens barrel or Focus Unit. XL shutter plates are specifically designed to screw into an XL Focus Unit. For system lenses: This is a square board to which you

mount your auxiliary shutter (typically Ilex No. 4 or Copal 3).

Lens Barrel: Some lens configs require or enable extra spacing in the form of a lens barrel. The shutter plate screws into this, which screws into a focus unit in turn. XL Focus Barrels combine a shutter plate with a lens barrel.

XL Plate: For XL focus units only. A special round plate screw into the end of the XL focus unit and provides a mounting surface for particular shutters. The most common plate, the "XL Barrel Plate," accepts XL Barrels.

UW Insert: For Ultrawide focus units only. This insert accepts a standard shutter plate or lens barrel, and is threaded into an Ultrawide Board. This module actually rotates in order to focus.

Focus Unit: The main component for lenses that don't have built-in focusing (typically view lenses). Three common focus units are available: The Standard Focus Unit, which accepts shutter plates or lens barrels, the Ultrawide Lensboard, which accepts an UW Insert, and the XL Focus Unit, which accepts XL Plates. System lenses that contain built-in focusing skip this module entirely.

Front Spacers: These square spacers come in 10mm, 15mm, and 20mm heights. They are the primary means of spacing a lens to the proper distance from the film plane for infinity focus. They can be stacked, but should not exceed 50mm in height. More spacing requires a Front Mounting Spacer. This mounts onto a Front Plate atop another front spacer, but additionally contains a new mounting point for additional front spacers on top. System lenses often require a special front spacer specifically designed for their infinity point. For system lenses, the Shutter Board mounts directly over the front spacer, with no focus unit in between.

Front Bolts/Washers: These M4 washers fit on M4 bolts, which are then used to clamp down the focus unit or shutter board, with front spacers in-between, into the Front Panel.

Front Panel: This is the most important Mercury module. Every Mercury config has a front panel of some kind. The most common one, the Standard Front Panel, works for most configs. However, special front panels are necessary for particular system lens formats (such as those designed for 135 formats) or ultra-thin bodies. The Front Panel includes threads and mounting points for a front spacer/lens stack, M4 bolts, a cable release, a tripod mount, a camera strap, and a Back Adapter. The Front Panel's M4 threads are open on both sides. The M4 bolts screw into the front side, and the bolts holding a Back Adapter screw into the back side. Certain specialty front panels integrate a back adapter rather than provisioning for one to be mounted to it (in cases where lens limitations require it).

Back Adapter: The back adapter is the second most important Mercury component. This actually mounts backs, while being itself semi-permanently mounted to the Front Panel. There are many different back adapters. The most popular include: Graflok 23, Graflok 45, Hasselblad V, and Mamiya 645 AFD. The back adapter mounts to the front plate via four short M4 bolts. Some back adapters come with "RS" ratings. This is the number of millimeters of rear spacing they introduce—in other words, how much the back adapter shifts the film plane in use. When back adapters shift the film plane back, you must compensate in the lens stack by removing a commensurate amount of front spacing (either in front spacers or lens barrels). Some back adapters, such as Graflok 45, come in multiple versions, each with a different RS rating, as well as a different set of compatible focal lengths that can be used with it at full format size.

Back: The back is the actual recording medium holder. There are hundreds of backs that can be used with Mercury, including roll film, canister film, sheet film, digital, instant film, etc. Most of these backs are third party. See the system diagram for many back types, or Mercury Back Guides at www.mercurycamera.com for extended discussions of available options from historical and current photographic practices.

1.3.2 Example Configurations

The following example configurations are shown in both photographic (assembled) and diagrammatic (exploded) form. Studying these configurations will provide you with a robust understanding of how Mercury configuration works in practice, as well as some of the things the system is capable of. It should be noted that in most of these cases, they represent only one of multiple possible ways to configure Mercury for a particular lens and back. And of course these are just a few of the thousands of possible configurations.

As in the system diagram, 3rd party components are rendered in blue.

Example #1: Medium Format, View Lens

This is a common, relatively inexpensive configuration.

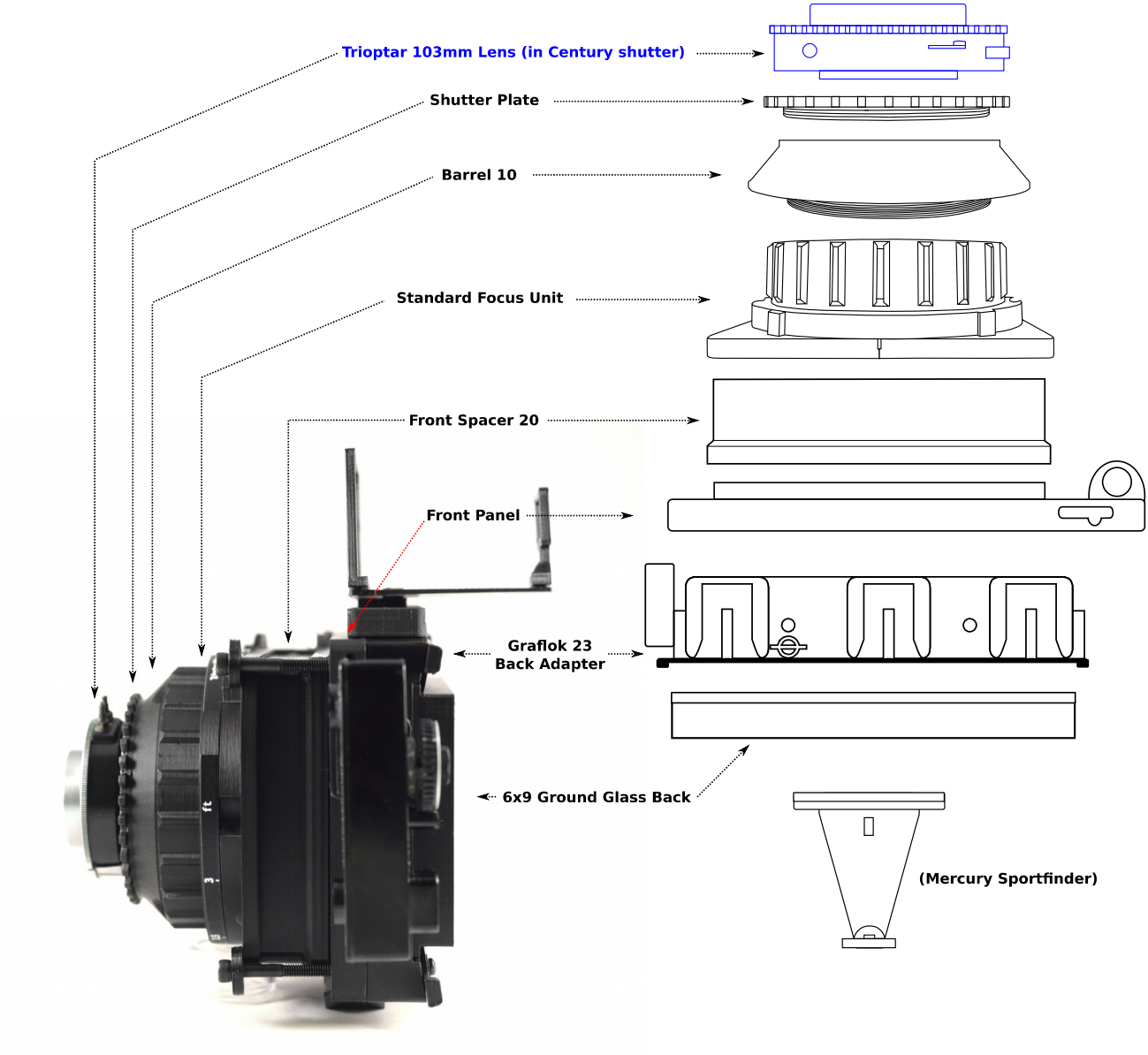

Example #2: Large Format, View Lens

A typical large format configuration.

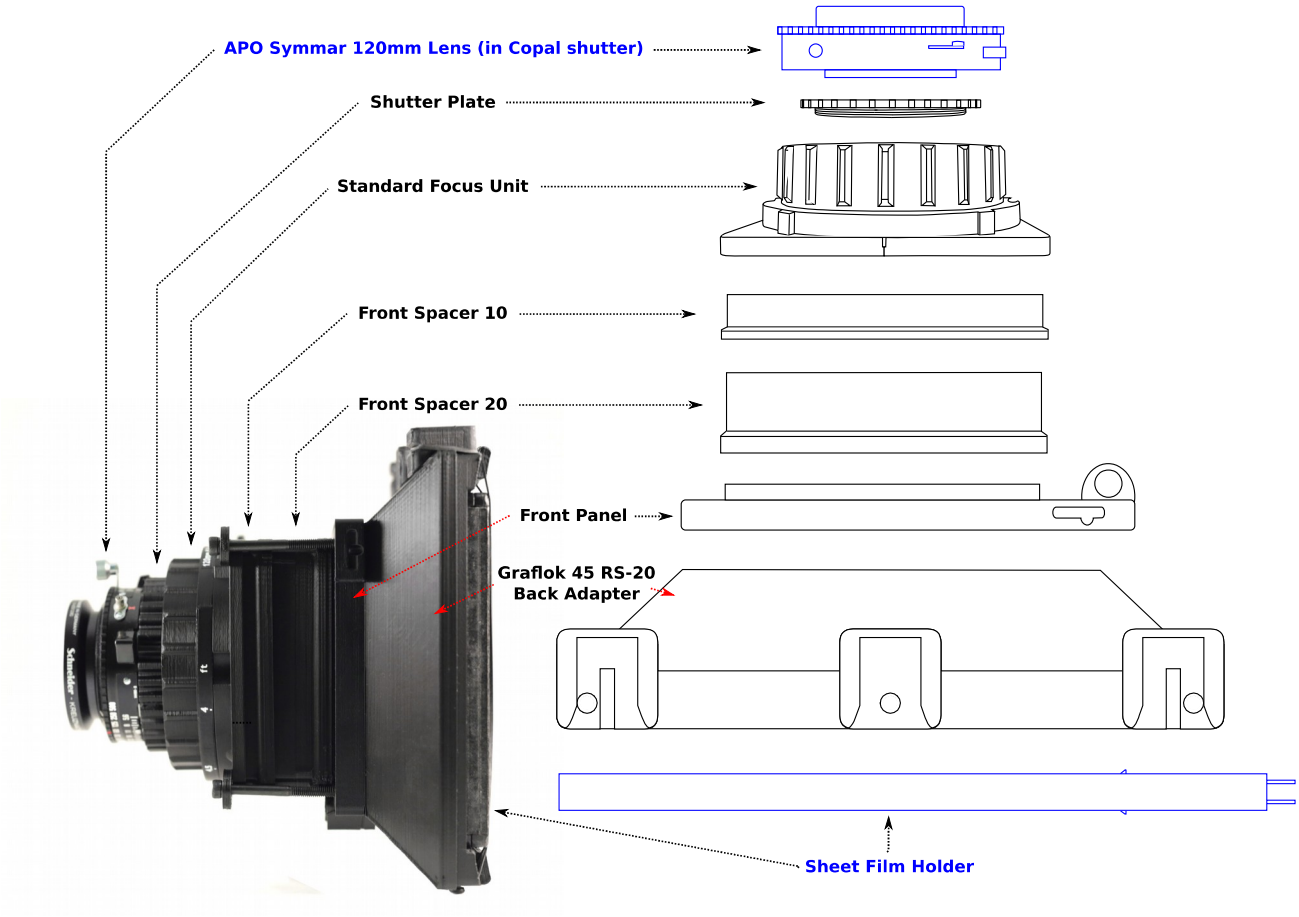

Example #3: Medium Format, System Lens

This is a typical configuration that makes use of medium format system lenses. The lens shown is a Schneider Exakta 66 lens, with Pentacon 6 mount, but most other system lenses would be configured in a very similar way.

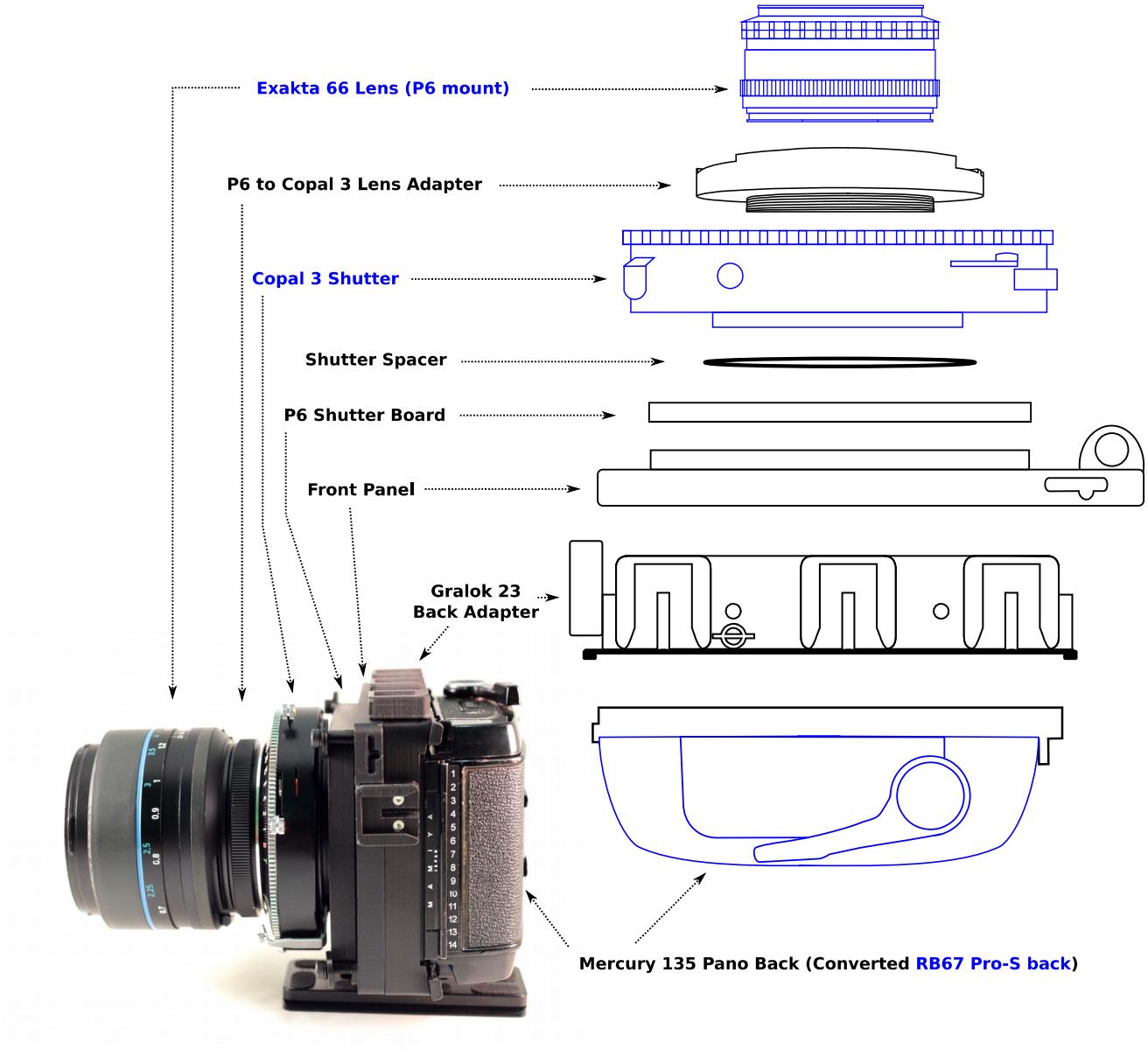

Example #4: Large Format, Large View Lens

Larger and longer lenses, like the Zeiss Sonnar 180mm f/4.8 shown, often utilize the XL Focus Unit in a configuration like this.

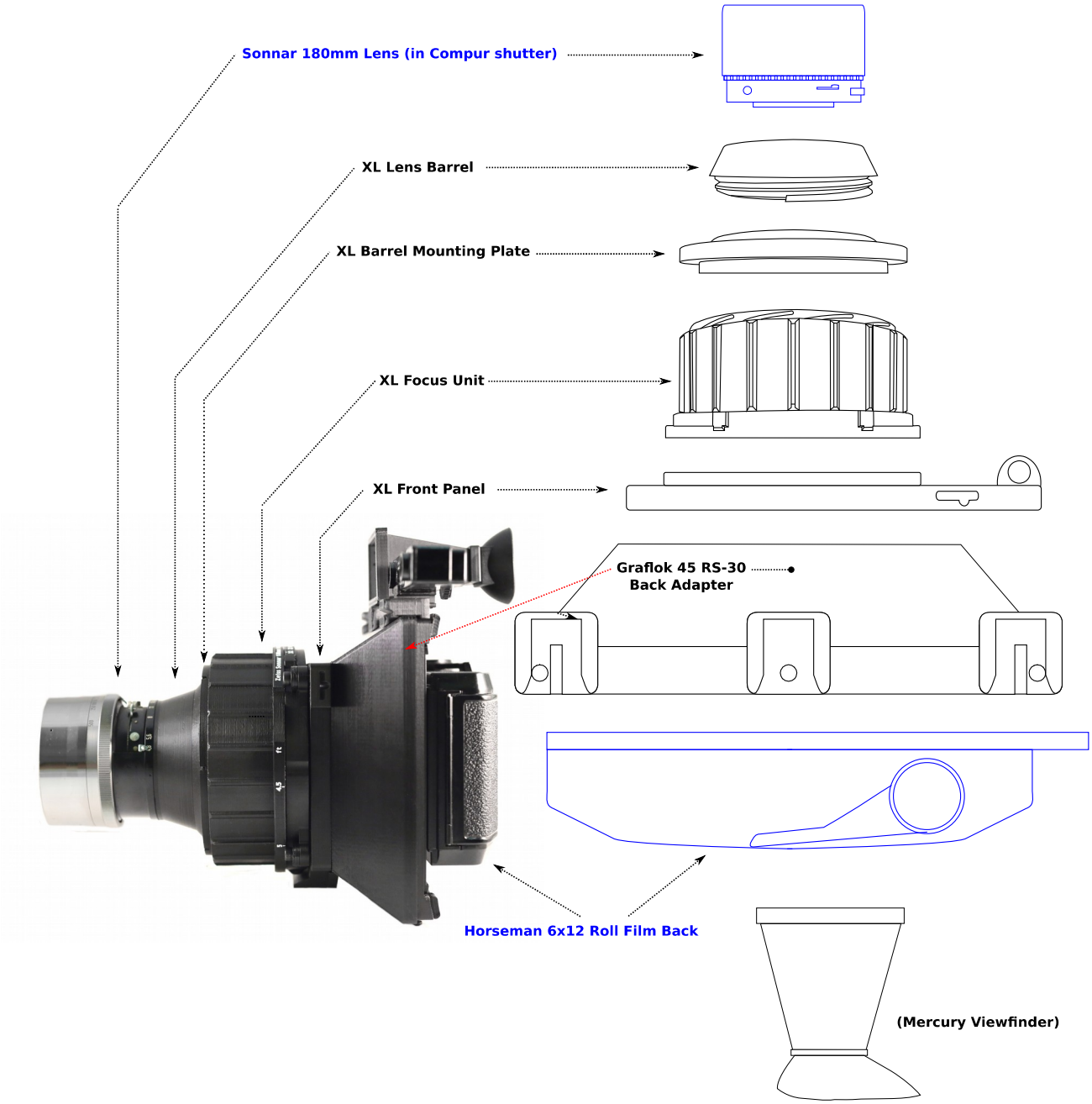

Example #5: Medium Format Digital, Wide Angle View Lens

A typical configuration incorporating a medium format digital back. While digital backs can also utilize a Mercury adapter to convert their mount to Graflok 23, this config is using a compact Mamiya 645 AFD back adapter. This allows for an RS-0 config, but can only mount M645 backs. This config also features the Ultrawide Helical Lens Board, utilized for extremely wide view lenses (in this case the Schneider Super Angulon 47mm f/5.6).

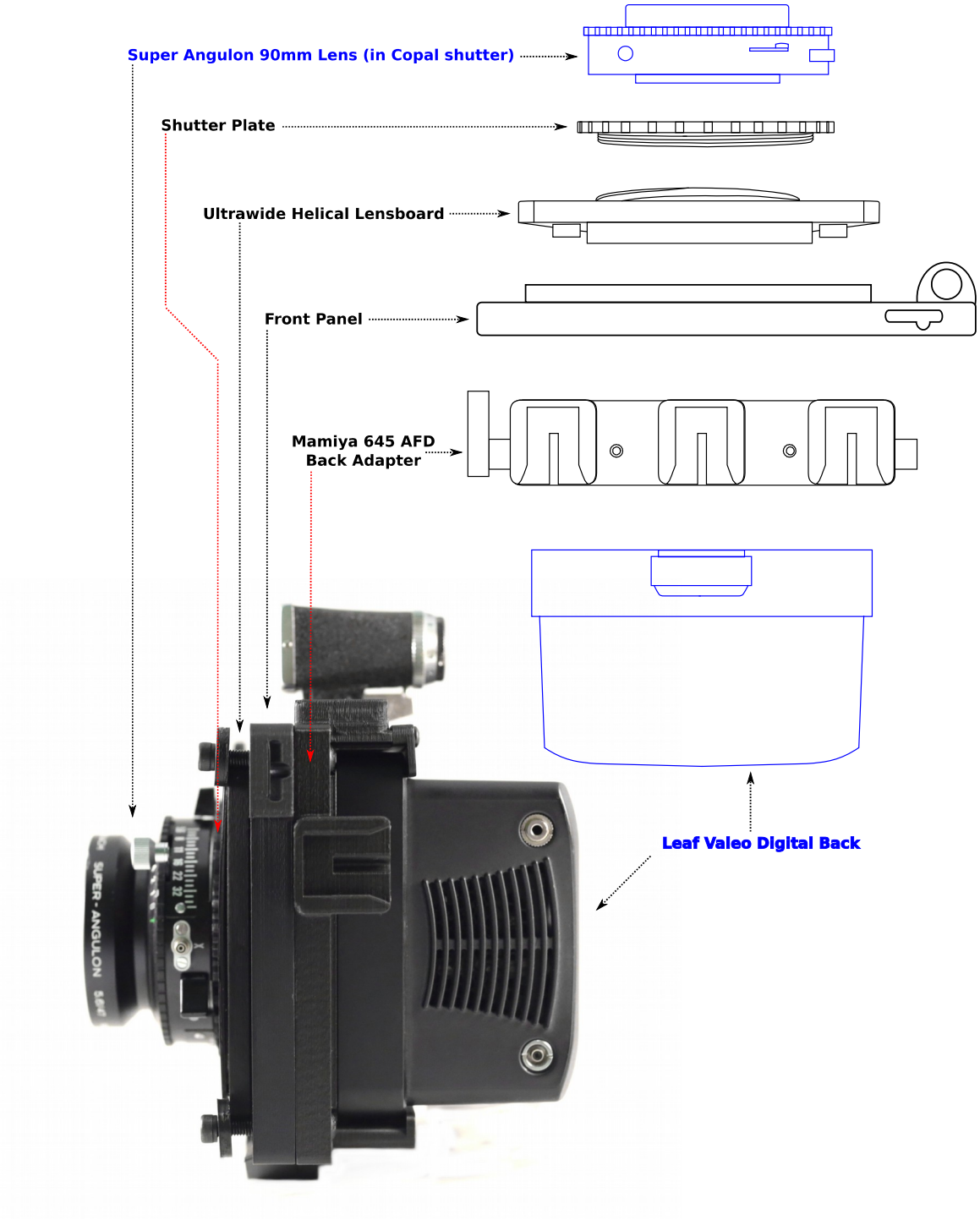

Example #6: Large Format, Long Lens

This is an uncommonly large configuration, not typically recommended. It is provided here as an illustration of what is required to utilize a very long (over 150mm), non-telephoto lens. This is a 210mm lens.

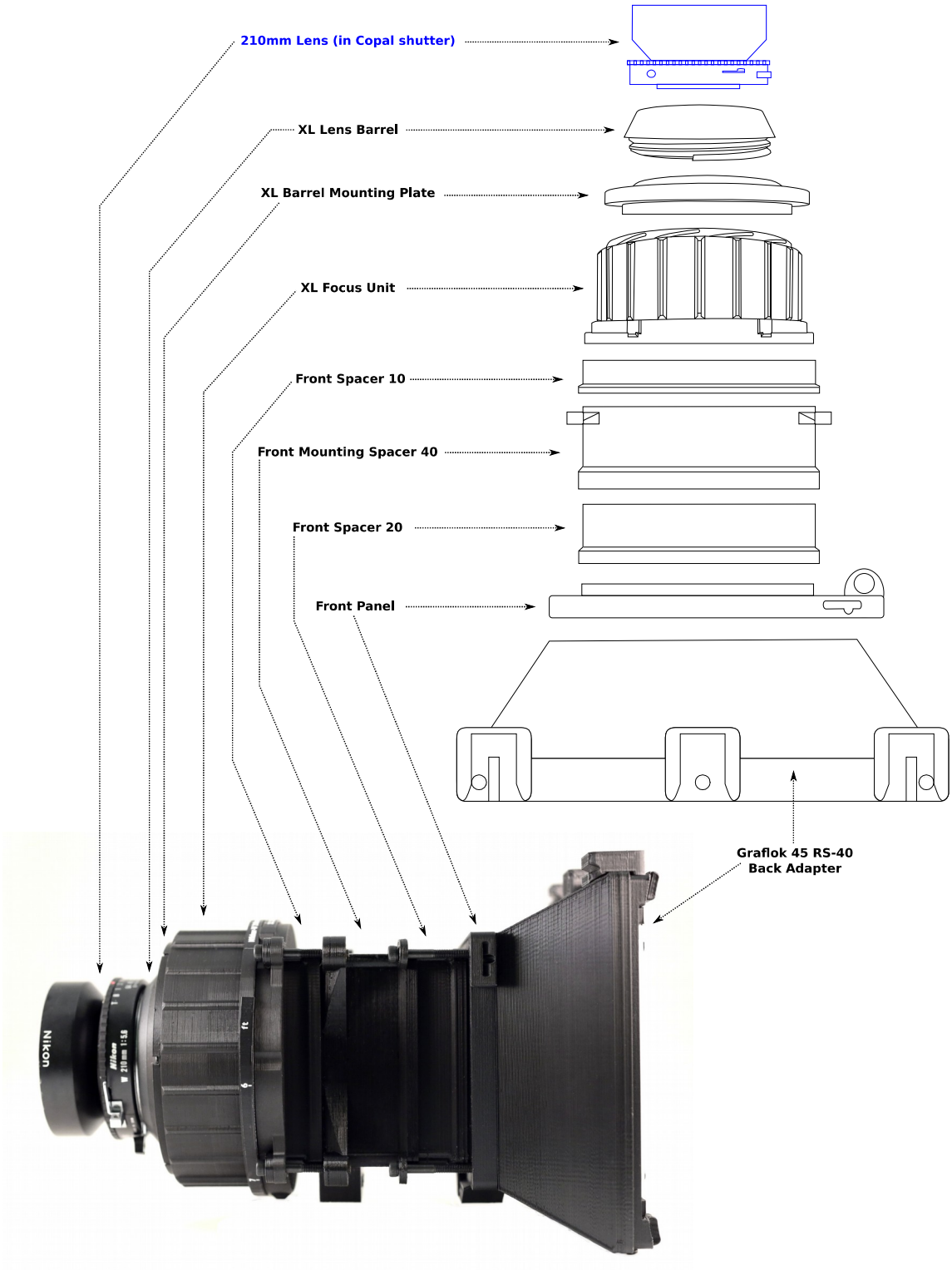

Example #7: 135 System Lens, Graflok 23 Back

This is a typical config for shooting 135 (small format) lenses. Instead of a separate front panel and back adapter, a single integrated panel takes the place of both, to which a large format shutter threads directly. The lens shown is a 35mm Schneider Tilt-Shift lens from the 1970s. Tilt-shift lenses have larger than standard 135 image circles, and are thus handy in this kind of setup. The back shown has gone through a Mercury conversion to become a “135 Extended Frame Back.” This converted back takes 135 (35mm) film and exposes a slightly longer than normal “full frame,” making it a good match for 135 system lenses. This lens is native Exakta mount, but utilizes the Mercury Canon EF to Ilex 4 mount adapter with its own adapter on board.

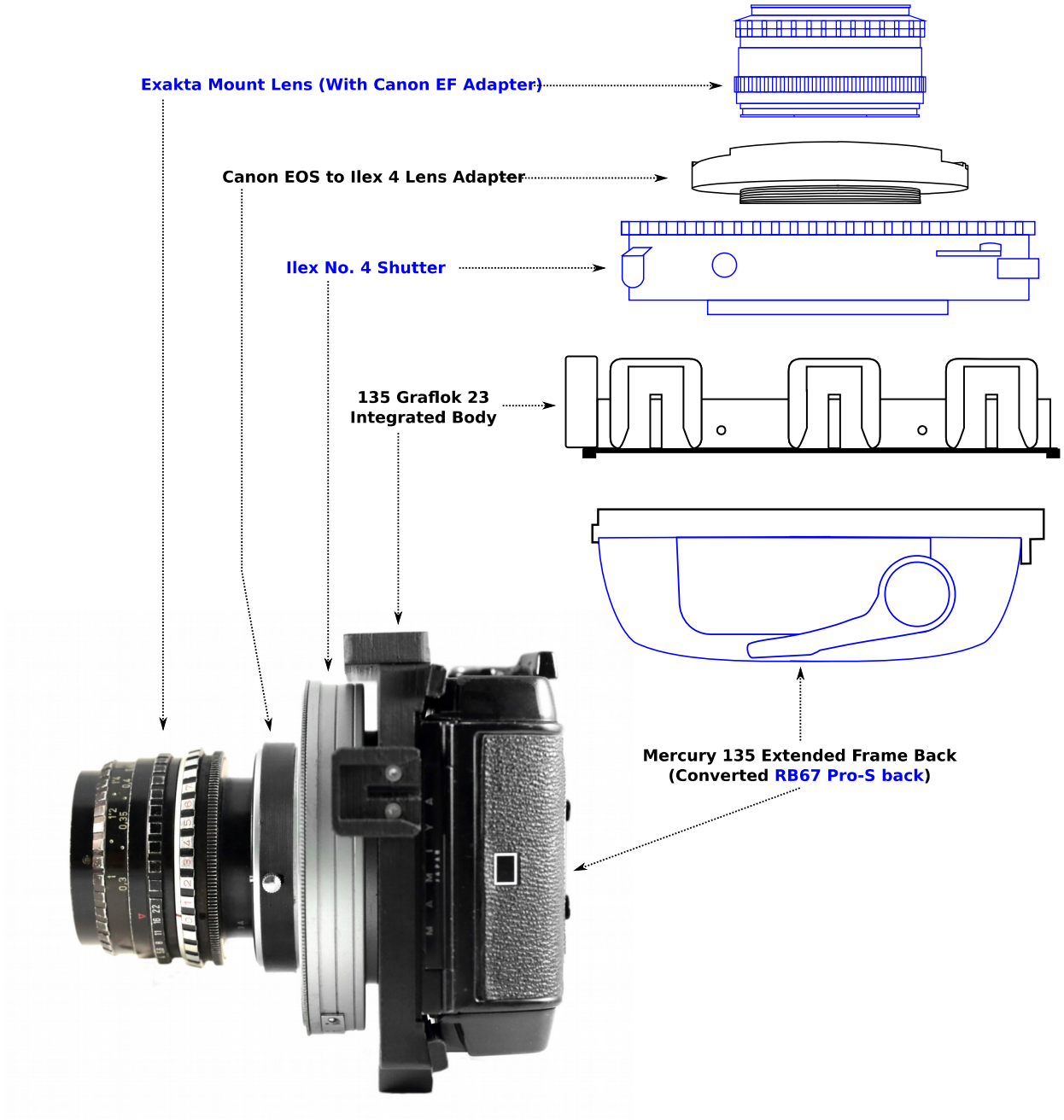

1.4 Precautions and Care

Don't Overtighten! Mercury is made mostly from plastic. Though it is robust in many ways, it is fragile in others. To prevent deforming or damaging parts, only tighten front bolts to finger-tightness. Rear bolts can be tighter, but only by a bit. The camera is designed to operate normally and with the most accuracy when everything is finger tight. However, it is important that threaded elements such as lens barrels and shutter plates be screwed in all the way, leaving no gaps between parts. Still, once the gap has disappeared, you should not force every last millimeter out of threaded components. The same goes for metal inserts, which can strip out of their surrounding plastic if too much pressure is applied to them.

Concentrated Heat: Most Mercury components are quite resistant to sun and heat, but some are sensitive due to the material they are constructed of. These include large format back adapter shells, front spacers, and sportfinders. The camera should not be left in a hot car, outside unattended, or near a window that could focus and intensify sunlight (this is actually the only problem that we have experienced directly).

Acetone Sensitivity: The Mercury components that are matte black in color are made out of ABS. This is a strong and durable material. One of its special properties is that it is very sensitive to acetone —the main ingrediant of nail polish remover. Practically speaking, this means that you shouldn't remove your nail polish while leaning over your Mercury—something you'd otherwise quite likely be tempted to do. However, this also means that acetone can be used to repair cracks, breaks, and loosened metal inserts. Just soak a Q-tip with acetone and apply it to the affected regions. Then hold pieces together until a strong bond is made. This is called “ABS welding.” If done properly, the pieces will be molecularly bonded and as strong as the original plastic pieces. Be aware, however, that acetone will make the ABS shiny, so your repaired sections will be visible to some degree. To repair a loosened metal insert, drip about 3-4 drops of acetone done to the bottom of the insert when it is properly in place. Some acetone will “melt” around the base of the thread, locking it in place.

Glue: You can also repair or augment your Mercury with glue. The best glue for most purposes is Super Glue (cyanoacrylate). Be sure to press the two parts being bonded together tightly for at least 60 seconds. Then let harden for 24 hours. This will produce a strong bond, but one that can still be broken with enough force.

Chapter 2: Assembling and Configuring Mercury

2.1 Front Panel

The Front Panel is the “hub” of your Mercury. It is the platform upon which everything else is assembled. The lens stack is mounted directly to this panel with M4 bolts and custom M4 washers. The washers should clamp down on the corners of the focus unit (or shutter board for system lenses). The standard washer thickness is 3mm, but thicker and thinner washers are also available for special situations.

Tighten the M4 bolts to secure the lens stack in place. These screws should be *finger tight only!* Use the included allen wrench only if the bolts aren't threading in the Front Panel smoothly. Overtightening these bolts will introduce warping into your lens stack (particularly the front board or base of your focus unit), making your focus marks less reliable. *Overtightening too much will strip the metal inserts inside the Front Panel*. If this happens, the camera will still be usable, but removing and replacing lens stacks and back adapters will become more difficult, as it will require one side to remain tightened while the other is removed.

In general, the back adapter should be attached to the front panel before the lens stack (see below).

Tripod Mount: Besides the back adapter and lens stack, you can attach a tripod or Quick Release plate to the bottom of the front plate. A QR plate is recommended, to allow easy mounting and dismounting on a tripod without placing undue stress on the bottom of your Mercury. Tripod accessories should only be attached once a back adapter has been mounted, as the back adapter completes the tripod mounting surface.

Camera Strap: The front plate can also accept a camera strap. Two types can be used: Flat straps can be thread through the available slots. Straps with spring-loaded hooks are meant to be attached to split rings, which can be attached to the holes on the front panel.

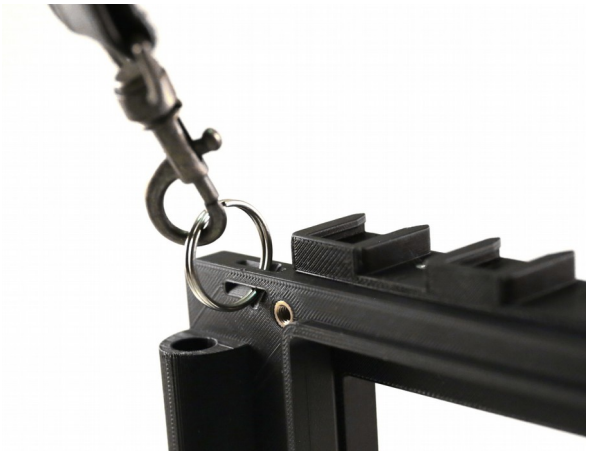

Cable Release: The Mercury Front Panel has a hole in the hand grip through which a standard mechanical cable release can be threaded. Most cable releases with a plastic grip at the trigger end will seat nicely at the top of the camera grip. Some very thin cable release heads may want to slip down the hole, and will require a Mercury Cable Release Adapter. Once a cable release has been seated in this way and attached to the cable release socket on your shutter, you have a functional trigger button for your right index finger. This configuration is highly recommended for handheld shooting.

2.1.1 Alternate Front Panels

Besides the standard Mercury front panel, two alternatives are available. Each is compatible with all Mercury back adapters. In addition to these alternate front panels, there are several Integrated Panels available; these area actually combo pieces that have a front panel and back adapter permanently integrated. These are covered in a later section, below.

XL Front Panel: The XL Front Panel has an extended side handle and extended tripod foot compared to the standard front panel. It is designed to to used with the XL Focus Unit, providing more room to grip the handle and allowing your camera to mount the XL Focus Unit without any front spacers. The standard front panel can mount the XL Focus Unit, but always requires at least one front spacer. The XL front panel can handle all other Mercury configs as well. It is, however, slightly more bulky than the standard front panel.

Mini Front Panel: The Mini Front Panel lacks the standard side handle, thus making your Mercury more compact in size.

2.1.2 Mercury QR Plate

This foot attaches to the tripod socket on the Mercury Front Panel. It functions to give your Mercury a platform so it can stand upright on a flat surface. The entire foot conforms to the Arca Swiss QR spec, and thus it can be mounted on any Arca Swiss style QR bracket without any additional hardware! It also contains a second standard 1/4-20 threaded tripod mount (with metal threads) toward its front, giving ample room below the foot to attach to nearly any tripod or quick release system.

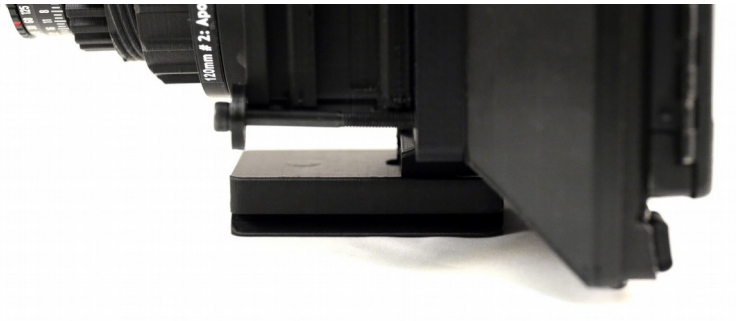

This works on any Mercury config (except the Polaroid CB-70 config, which includes a modified version of this QR plate already), but is particularly useful in configs utilizing Mercury Graflok 45 back adapters. The size of angle of these back adapters leave a rather small amount of space in which to attach to tripods. Many larger tripods or quick release systems can't mount directly. The Mercury QR plate solves this problem, as its second tripod socket is further forward, giving ample room for any other quick release system.

Additionally, this can adjust so that the rear of the plate butts up against the RS-20 and RS-30 versions of the Graflok 45 back adapter, providing additional support and stability (i.e, it can't rotate as can happen with most generic QR plates).

Use the included black ¼-20 bolt to attach directly to the tripod socket in the Mercury front panel. If using with an RS-20 or RS-30 Graflok 45 Back Adapter, adjust the position before tightening all the way so that the rear top edge of the plate presses against the sloping section of the back adapter (as in the above image). Then tighten all the way. (As with all Mercury components, do not overtigthen.)

2.2 Back Adapters

Back adapters are standard modules that lock into any Front Panel. Back adapters in turn accept various film and digital backs. A Mercury front panel + back adapter = a complete camera body.

2.2.1 Mounting and Dismounting

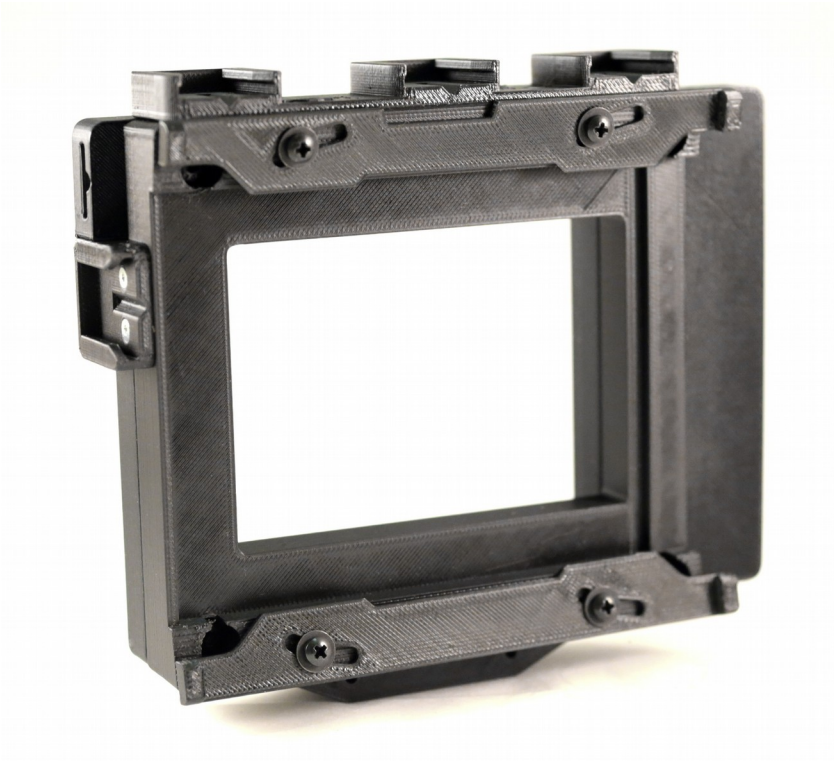

To attach a back adapter to a Front Panel, you must first snap the Light Seal (a thin, square ring of plastic) into the groove of either the Front Panel or the back adapter. The slightly wider side of the light seal should be pressed into the back adapter, the thinner side into the front panel. Press the two pieces together and hold them firmly while tightening an M4 bolt into each corner (use the allen wrench that is included with any extra back adapter kit from Mercury Works). It is important to check for any gaps between the two modules—they must fit together tightly to maintain proper image plane distance. Overtightening these bolts will result in the metal inserts in the Front Panel being pulled into their cavities, closer to the back adapter. At the point where you sense or see that the insert wants to move, you should cease tightening. If you feel that one or more bolts needs to be tighter (unlikely), wait until the lens stack is attached on the front, then apply slightly more pressure on the affected bolts on the back adapter side.

When removing and replacing one back adapter with another, follow this procedure in reverse, transferring the M4 bolts and the light ring into the new back adapter.

Two back adapters render these bolts inaccessible: the Graflok 23 and the Polaroid CB-70. The former, pictured above, requires that you remove one each of the top and bottom Graflok slider screws (it doesn't matter which one). Once you have one removed, along with its washer, turn the slider ninety degrees (so it is facing up or down). Now all four back adapter bolts will be accessible. For instructions on attaching and detaching the CB-70 back adapter and back, see the “Polaroid CB-70 Kit” supplemental instructions at www.mercurycamera.com.

2.2.2 Graflok 23 Back Adapter

The two most common Mercury back adapters are the Graflok 23 and the Graflok 45. These conform to the original Graflex standards. To mount a back to these, simply open the Graflok sliders by sliding them to the right, insert the back (taking care that the back's light trap is properly seated inside the back adapter's groove on the right), then lock it in place by sliding the sliders as far to the left as they will go. Some backs will allow them to go all the way, others will be firmly locked after partial movement to the left. The Mercury Graflok 23 back adapter is compatible with all medium format roll film backs made by Graflex, Horseman, and Mamiya (for the RB67 camera system).

As noted above, on the Graflok 23 back adapter, the mounting bolts are obscured by the sliders,

requiring that the sliders be turned perpendicular for removal or insertion.

2.2.3 Graflok 45 Back Adapter

This back adapter conform to the original Graflex 45 (sometimes called “International”) standard. To mount a back to this, simply open the Graflok sliders by sliding them to the right, insert the back (taking care that the back's light trap is properly seated inside the back adapter's groove on the right), then lock it in place by sliding the sliders as far to the left as they will go. Some backs will allow them to go all the way, others will be firmly locked after partial movement to the left. The Mercury Graflok 23 back adapter is compatible with all medium format roll film backs made by Graflex, Horseman, and Mamiya (for the RB67 camera system). This back adapter is compatible with nearly all backs of any kind, by many manufacturer, that conform to the Graflok 45 / International standard.

This back adapter comes in three versions, each with a different depth: 20mm, 30mm, and 40mm. Shallower back adapters will cause longer lenses to vignette on the left and right sides (they light cone is getting chopped off by the long lens stack necessitated by a shorter back adapter). On the other hand, deeper back adapters give fewer options for shortening the lens stack for use with special backs, etc.

Note that all of these back adapter versions have an RS value larger than 0. That means that shifting the focal plan back is unavoidable with these backs, making them incompatible with some wider lenses. To determine which lenses are compatible with these, you must look up the appropriate RS-value column in the Mercury View Lens Database (found at www.mercurycamera.com/lenses/compatible-lenses/). Lenses with green or yellow highlighted cells in the appropriate column are compatible with this back adapter. Red cells mean incompatibility. Thus this spreadsheet gives a visual indication of the relationship between different RS values and the lenses that can make use of them. This gives you the flange distance limitations.

The following are the focal length vignetting limitations:

RS-20 Version: This can handle all known 4x5 wide lenses, down to 45mm flange distance (which includes 35mm focal lengths). It can typically handle up to 135mm focal lengths. Lenses longer than 135mm begin to have soft right and left edges. 150mm has about 3mm cropped from each side.

When using this version of the 45 Back Adapter, use of the Mercury QR Plate (see 2.1.2 above) is *highly recommended*.

RS-30 Version: Here the widest possible lenses are 65mm (but check the Mercury View Lens Database for particular model compatibility). It can handle up to 180mm lenses before they start to vignette on the left and right sides.

RS-40 Version: This is only recommended if you want to use very long lenses on your Mercury config. It can handle up to 210mm lenses without significant vignetting, but will do so after that.

2.2.4 5x7 Merclok Back Adapter

This is our 5x7 back adapter. It is compatible with with international 5x7 sheet film holder standard. It is also compatible with 6x17 roll film backs made for 5x7 cameras: Da Yi and Canham both make this kind of back. (These provide you with the ultimate panoramic image, though you only get four images per roll of 120 film!)

This back adapter can mount on any front panel, but it is highly recommended that it be paired with an XL Front Panel, given better access to the tripod mount, and making the side handle usable.

Graflex never created a 5x7 Graflok standard, so we created our own! It uses a slider system like Graflok 23 and 45, with one major difference: We sized the depth of our slider system so that they lock onto standard film holders rather than thinner accessories. Backs that are thinner than this standard require spacers to work with the Merclok 57 system. Here are the requirements:

Wooden 5x7 sheet film holders (Kodak, Baco, Ansco): No spacers necessary.

Fidelity Elite plastic 5x7 sheet film holders: "Fidelity spacers" necessary from Mercury Works. These thin spacers must be inserted when locking the back in place.

Da Yi 6x17 roll film back for 5x7 cameras: "Dayi spacers" necessary from Mercury Works. These spacers snap into the back and can remain always on. Note: This back is available via Ebay.

Canham 6x17 Roll Film Back: "Canham spacers" necessary from Mercury Works. These spacers snap into the back and can remain always on. Note: This deluxe motorized back is available, at great cost, directly from Canham Cameras.

2.2.5 Hasselblad V Back Adapter

The Mercury Hasselblad V Back Adapter mounts various backs made for the Hasselblad V system. Because these backs have been made by many manufacturers, over many decades, many variations exist. The Mercury Hasselblad V back adapter comes in two "types," with two different sized top catches. Each type comes with the standard (white, nylon) top catch installed. If you find that your back cannot fully lock (i.e., the catch doesn't extend far enough out of the back adapter) you can replace it with the included black catch.

Back compatibility:

Type 1: Works with Hasselblad film backs, Kiev 88 film backs, Hasselblad Digital Backs, Phase One digital backs, Jenoptik digital backs, and Sinar digital backs. Some Hasselblad brand backs may require the black (extended) top catch.

Type 2: Works with most Hasselblad film backs, Leaf digital backs, and the Kodak DCS Pro Back.

2.2.6 Mamiya and Centax 645 Back Adapters

These back adapters are designed for medium format digital backs. They should work with any brand

of back. However, due to the original Mamiya and Contax designs for these back systems, the catches are rather flimsy. They will hold your back in place, but it is highly recommended that you use the Mercury Digital Back Adapter Clamps when using these back adapters. Currently clamps are available for Leaf brand backs only (Valeo and Aptus). However, given the correct specifications, we can (and will) make more clamps for more digiback models.

2.2.7 Jieying Multi-Mount Digital Back Adapter

This back adapter was designed to accept Jieying digital back adapter plates. Jieying is a Chinese company that makes a line of digital back adapters for a couple of different camera mounts (most commonly Graflok 45). All of their plates are exchangeable. You can remove any of them and mount them to this Mercury back adapter for a true RS-0 config. There are two advantages of Jieying plates: they are made of metal and thus very robust, and they are made for four digital back mounts: Hasselblad V, Mamiya 645 AFD, Contax 645, and Hasselblad H. This is a great option if for M645 digital backs for which Mercury clamps are not yet available. It is also the only current solution to mount a Hasselblad H mount digital back to Mercury. The one caveat with these plates is that they are not compatible with all brands and models of backs—Jieying faces the same problem as Mercury Works: there is a great degree of variability in the “standard” mounts of different manufacturers.

2.2.8 Polaroid CB-70 Back Adapter

This specialty back adapter allows you to mount a Polaroid CB-70 or CB-72 integral film back to your Mercury. The CB-70/72 is a fully automatic, motorized back that takes Polaroid 600 film (by Polaroid of the Impossible Project). It is a professional medical device, originally used on retinal scan cameras. It is popularly adapted to the Mamiya Universal Press camera, though it can only mount upside down on that camera. This Mercury back adapter marks the first time that any camera has been officially able to mount the CB-70/72, in its proper orientation, for full frame coverage!

In order to facilitate lens changes, this back adapter, uniquely, has a built-in darkslide.

Unlike all other Mercury back adapters, this one comes in two “halves.” Two plates are aligned and mounted on a Mercury front panel like other back adapters. A third panel is mounted directly to the CB-70 itself. To mount the back on Mercury, you then align the two halves and insert three screws on the sides and bottom. Thus while you can swap out this back adapter just like others, it is a multi-stage process and not recommended. It is better to retain a separate Mercury body devoted to Polaroid 600.

All of these components, as well as a QR plate and cold shoe rack for mounting on the bottom of the CB-70 back, come together in the Mercury Polaroid CB-70 kit. Complete instructions for assembly and use can be found in the supplemental “Polaroid CB-70” document at www.mercurycamera.com.

2.3 Integrated Panels

Integrated Panels combine a front panel with a back adapter as one single part. For that reason, they are less versatile than ordinary front panels and back adapters. However, they allow for certain capabilities that can't be accomplished with standard parts.

2.3.1 XL-S Integrated Panel

The XL-S combines an XL Front Panel with a Graflok 23 Back Adapter. Its chief features, however, is that it is 10mm thinner than this combo would be ordinarily. This slimmer unit thus starts out at RS *negative* 10, meaning that in any ordinary config it will shift the focus plane forward by 10mm. To shoot at RS0, you would need to add one FS10 (10mm Front Spacer) to the lens stack. However, the common usage is to achieve higher RS values than your lens stack is capable of. For instance, the XL-S can be used with the RB67 config and no front spacer to produce an otherwise unattanable RS-30 config capable of mounting the Mercury Instax Wide for 23 back.

2.3.2 MUP Integrated Body

The MUP Integrated Body has a standard Mercury front, but accepts Mamiya Universal Press backs and back adapters instead of ordinary Mercury back adapters. It can mount any standard MUP back adapter (M, G, ground glass) and any back that bypasses the back adapter and mounts directly to the MUP (Polaroid, some custom 3rd party backs). The MUP Panel is RS0, ready to mount any type of lens.

To mount a back adapter or direct back, just insert it into the back and move the locking levers on the sides of the panel into the “Lock” position. Do not force them; once they feel tight, your back/back adapter is locked in place. Using too much force can damage your camera.

If you wish to attach a camera strap, insert split rings into the holes on either side of the camera. Note, however, that excessive force applied to these can tear out the locking lever mechanism, so great care should be used when utilizing a strap. You can, alternately, remove the strap lugs. You will need a 1.5mm hex wrench (allen key). The lug and screws can then be replaced by the four small phillips head screws provided.

The MUP Integrated Body comes with a rectangular shutter release adapter. Unlike the standard Mercury front panel, this integrated body has no available space with which to thread a shutter release cable to act as a body trigger. If you wish to fire your shutter from the body, you can use the MUP

shutter release adapter. It mounts alongside any 15mm or 20mm front spacer. Just run your front M4 bolts through its two mounting holes. It can be flipped upside down, and can therefore be mounted on either the right or the left of the lens stack.

2.3.3 600SE Integrated Body

This is just like the MUP Panel, but it mounts Polaroid 600SE backs instead of MUP backs.

2.3.4 Small Format Mercury Integrated Panels

These integrated panels are very thin to enable the mounting of lenses designed for the 135 (35mm) format. Each is designed to have a large shutter threaded directly into the front of the panel. The rear of the panel behaves just like an ordinary Mercury back adapter. Several options are available. See2.11.3 Using 135 System Lenses with your Mercury for more information on these configs.

2.4 The Lens Stack

A lens stack is held together by M4 bolts and M58 threads. At least one boltable module needs to be present (usually a focus unit, shutter board for system lenses, or Front Mounting Spacer). This is held down by M4 washers threaded through M4 bolts. This module often sandwiches one or more Front Spacers between it and the Front Panel—but sometimes is bolted directly to the Front Panel without any spacers between the two.

After the focus unit or shutter board, a lens barrel and/or shutter plate is often threaded into the focus unit.

2.4.1 Standard Focus Unit

The standard focus unit accepts lenses from roughly 65mm to 150mm in focal length, with rear elements 53mm or smaller in diameter. The back side is bolted to the front plate. The front side contains M58 threads that accept lens barrels or shutter plates.

The standard FU accepts a depth of field (DOF) scale. Just bend it slightly, then insert it between the two tabs on top of the focus unit, taking care to line up the DOF scale's central focus indicator with the indented line on top of the focus unit (see illustration).

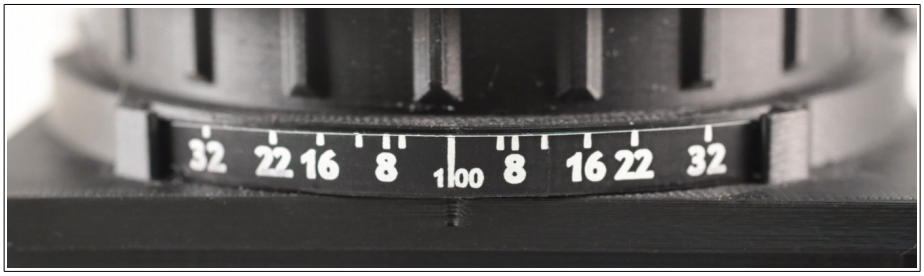

A Focus Scale Ring can be slid over the knurled adjustment ring. Just line up the small indicator mark on the focus scale ring with the corresponding mark on the outer knurled adjustment ring. Then push the entire ring back until it makes firm contact with the back of the focus unit.

Calibrating your focus scale ring: The first time you use a focus scale ring, you will need to adhere the focus scale to the ring. To do this, you can either manually calibrate it (recommended) or simple use the default calibration mark. To calibrate it yourself, which will be the most accurate, simple mount your plain focus scale ring, set the camera up on a tripod, and—using ground glass or a digital back—focus on several objects with definite distances (measured with a tape measure to the film plane line). Recommended distances are infinity, 10' and 6'. When you are sure that your target is in focus, make a pencil mark on the focus scale ring. Once you have several such marks, line up your adhesive scale and stick it to the focus scale ring.

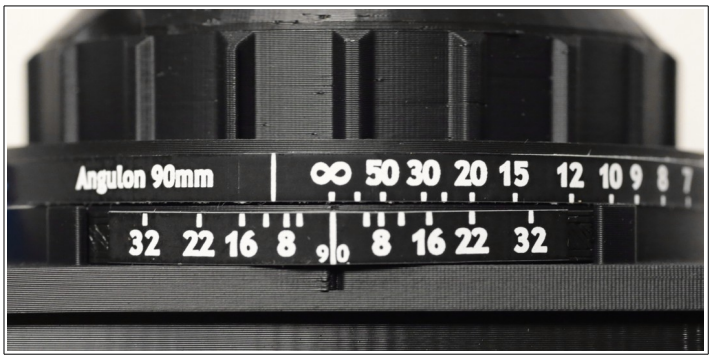

If you don't have ground glass or any other means of precisely measuring distance and focus, you can use the default calibration line on the adhesive scale. To use this, fully retract the focus unit, until the adjustment ring cannot move any farther. Then look for the long line that goes fully through the focus scale, line it up with the focus indicator mark on your focus unit and/or DOF scale, and stick the focus scale onto the focus ring. Press it down slowly and firmly. If you make a mistake, peel it up and start again.

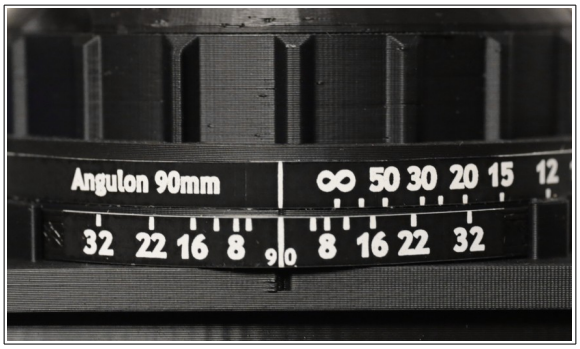

2.4.2 XL Focus Unit

The XL Focus Unit mounts to the Mercury Front Panel similarly to the standard FU, except that it requires special, small front washers. Standard front washers will not fit correctly and will splay out the M4 bolts.

When used with a standard front panel, the XL FU requires at least one front spacer between it and the front panel (even if it is only an FS-10). When used with the XL Front Plate, the XL FU can be used with or without front spacers.

The XL FU requires an XL Plate. This circular module fits on the front end of the XL FU. It is held into place by six small bolts. Do not overtighten these: they should be firm but not extremely tight. The most common XL plate is the XL Barrel Plate. This contains a large, coarsely threaded hole that accepts XL Barrels of different lengths, allowing many different lenses to be mounted, and easily swapped. However, some lenses and shutters are too large for the XL Barrel Plate. XL plates exist for various different shutters, from Copal 0 up to Ilex 5. The RB67 Lens Mount Adapter is also an XL plate.

The XL FU accepts its own DOF scale and focus scale ring just like the standard FU. Also like the standard unit, you can choose to calibrate your own focus scale, or utilize the standard calibration mark when adhering the scale to your ring. However, the XL FU has two different types of focus rings: a Round Ring and a Sculpted Ring. The round ring works just like a standard FU ring except that it can get in the way of inserting or removing front bolts when removing an XL FU from your camera. The sculpted ring allows you to rotate the unit until the sculpted “holes” in the ring line up with the FU base, allowing very easy removal or addition of bolts. The sculpted ring is the default.

Calibrating your XL focus scale ring:

XL focus scale function like standard focus scales except that many of them come in two sections. Apply the first section first, calibrating it if you can to find your infinity point, or using the retraction point of your focus unit if you must. Apply the longer scale.

Next, apply the small section of your vinyl scale. This one begins with a dotted line. If it didn't come snipped, you should use a scissors to cut out one corner, removing one or two of the dots on this line. Then apply this section over the end of your first scale section such that the dotted lines perfectly match up.

When applying focus scales to a sculpted ring, initially adhere the scale only to the outer counters of the circle; do *not* allow the scale to press down into the sculpted holes. This would render your scale inaccurate. Rather, once the scale is adhered to the outer circle, check to see if any distance markings are bridging over a sculpted hole. If any do, mark inside the hole with a pencil the exact point where the distance marking should be (directly below the scale's mark). Then cut the vinyl scale at the four points where it passes over a sculpted hole and allow the loose ends to adhere to the contour of the sculpted section. Wherever you made a mark, position that small section of the vinyl scale such that it's mark lines up with one you made. You now have an accurate scale.

2.4.3 XLS Focus Unit

The XLS Focus Unit is approximately the thickness of a standard FU, but utilizes the XL FU platform, allowing it to mount much larger lenses. It is 20mm thinner than the XL FU, but accepts all XL Plates, XL DOF scales, and focus scales (though it only has about half the extension, and thus only the first half of any XL scale can be used).

The XLS is primarily designed for physically large view lenses of only moderate length, from 90-120mm. These lenses are common, for example, as extreme wide angles for 5x7.

In principle, any lens that works on the XL focus unit can be mounted on an XLS unit. Simple add 20mm of front spacing. The focus scale will need to be re-calibrated for infinity.

2.4.4 Ultrawide Board

The Ultrawide Board mounts like the standard focus unit (albeit usually without any front spacers).

The UW Insert threads into it and acts as the helical to focus your ultra-wide view lenses. The UW insert accepts standard shutter plates or lens barrels.

The Focus Scale for the Ultrawide board is a thin, flat plate. Mount it by pressing it gently into the corresponding indents in the board. To remove the focus scale, pry it up carefully with a fingernail, knife, or small screwdriver, taking care not to snap off the small pegs.

Unlike the standard and XL focus units, the Ultrawide board *must* be manually calibrated. To do this, first mount your lens according to its lens formula. Screw in the Insert until it is roughly parallel to the front of the Ultrawide board itself. Using a ground glass or digital back, turn the Insert until your lens is focused at infinity. When you are at your sharpest point, place a small piece of white tape on the edge of your Insert roughly lined up with the infinity point on the board's focus scale. Then make a black mark on the tape that perfectly lines up with the infinity mark. This is your indicator mark. As you turn your Insert, it will line up with various focus marks indicating the distance at which you are currently focused. Red numbers indicate positions over 360 degrees from infinity—in other words, once you have made on full turn, and are past your original infinity point, use red numbers instead of white.

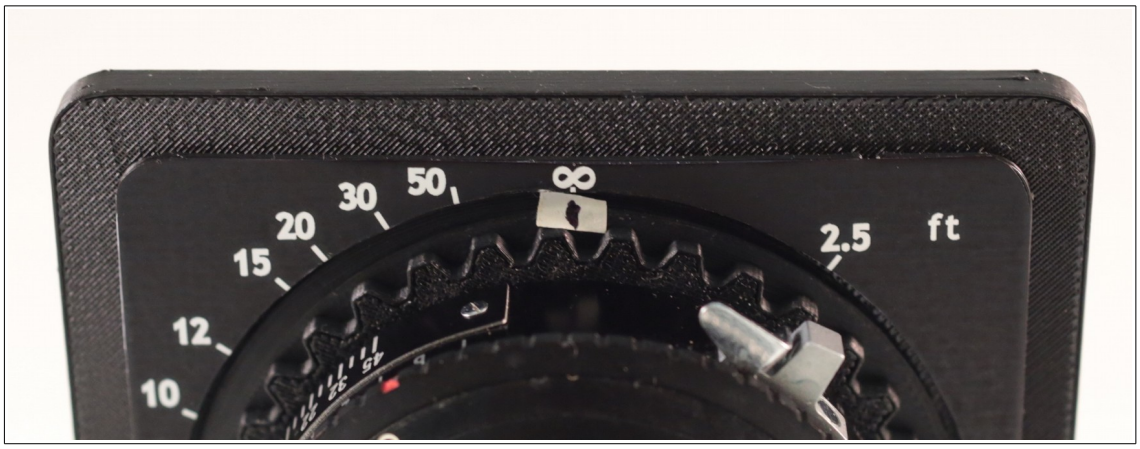

For a more permanent and aesthetically pleasing indicator mark, you can use white paint to make a dot or line. You can also add additional marks for depth of field or hyperfocal distances. Just use a table, web tool, or mobile app like HyperFocal Pro to determine where those marks should be (using the focus scale as your guide), then paint or scratch in any marks that will be helpful to you.

When the Ultrawide board is used with a different lens, you should leave the lens (and lens barrel, if used) attached to the Insert, and unthread the Insert itself. In other words, each lens kit should include a permanently installed Insert. Using one Insert for multiple lenses would render your indicator mark(s) inaccurate.

2.4.5 System Lens Adapter Kit

Most of this section assumes that you are using a view lens for your Mercury config. However, Mercury can also be configured to utilize “system” lenses. Mercury can mount Hasselblad V, Mamiya

645, Pentax 645, Pentax 67, Pentacon 6, and other medium format system lenses. Mercury can also mount many 135 (“35mm”) system lenses as well, such as Canon EF, Nikon, Minolta, Canon FD, and many more. 135 system lenses, however, are not alternative lens stack configurations as much as they are special front panels that accept a large format shutter and Mercury adapters to various mounts.

Because system lenses lack shutters, Mercury system lens kits require you to purchase a large format shutter (Ilex No. 4 or Copal 3) to complete the config.

A system lens adapter kit consists of a system lens mount adapter (which allows the lens to mount to a vintage shutter), a shutter board (which allows the large shutter to mount to your lens stack), and, sometimes, a front spacer. Examples #3 and #7 in Section 1.3.2 demonstrates a system lens config.

Because system lenses have a number of special considerations, they are covered in their own section below.

2.4.6 Shutter Plate

The shutter plate exists for you to mount your view lens upon. This module takes the place of the lensboard that such lenses were originally designed to mount upon. To mount one, remove the lens' rear element (unless it is smaller than the shutter's rear threads), remove the shutter's retaining ring or flange, place the shutter's rear threads through the hole in the shutter plate, then replace the retaining ring or flange. The removal and replacement of the retaining ring will likely require a *spanner wrench*, which can be purchased inexpensively online (see the Mercury Accessories Buying Guide).

When you first mount your lens on the shutter plate, don't tighten the retaining ring too much. Screw the shutter plate together with the lens barrel (if applicable), focus unit, etc. See where the lens' shutter release falls. You want it to fall somewhere between six o-clock and nine o'clock if facing your camera from the front. Make a small mark with a pencil if you need to rotate it. Then use your spanner wrench to loosen the retaining ring, rotate the lens to the desired position, and then tighten the ring. When in the final position, make this ring very tight, or it will tend to slip over time.

2.4.7 Front Washers and Bolts

Front washers fit tightly over M4 bolts by necessity. Sometimes they must be pressed quite tightly. They need to fit snugly against the heads of the bolts. The default washers are 3mm in thickness. If you wish to shorten the depth that the bolts require to be screwed in to the metal threads, you can use thicker washers. Mercury Works has 4mm and 5mm washers available, as well as thinner 2mm ones (not recommended).

2.5 Sportfinder

The Mercury sportfinder is a modular, lightweight, simple system for composition. It consists of the following parts:

- cold shoe foot
- base
- eyepiece
- reticule

The first two items are included with any Mercury camera kit. The last two are usually included in lens kits.

The size of the reticule determines the field of view of the sportfinder. Six different standard sizes are available. Use the following chart to determine the proper reticule for your particular format and lens:

Reticle Size	6x9	4x5	645/Instax Mini	Instax Wide	35mm
1	180mm	300mm	120-150mm	210mm	85mm
2	120-150mm	180-210mm	90-105mm	180mm	60mm
3	90-105mm	135-165mm	80-90mm	120-150mm	40-50mm
4	80-90mm	127-135mm	75-80mm	90-105mm	35mm
5	75-80mm	120-127mm	65mm	80-90mm	28-35mm
5W	65mm	105mm	58mm	75-80mm	28mm

Each reticule contains an outer frame for the 6x9 aspect ratio, and inner points that indicate a 6x7 aspect ratio. Use whichever frame most accurately matches your format (e.g., use the inner marks for 4x5).

In general, eyepieces are matched to reticules. The Type 1 eyepiece (which is indicated by a single hole in its column) and the Type 2 eyepiece (two holes in the column) match particular reticules, each of which contains either one or two holes in its base. The W eyepiece has a special function. It is round instead of rectangular, and is meant to be pressed up to your eye rather than matched to the reticule's frame (see the next section for instructions on use). Thus it yields a wider field of view. It is meant to be used with reticule size 5 for wider lenses. This pairing is referred to as “5W.”

There are also special square reticules and matching eyepieces for square formats, such as Polaroid 600 or 6x6.

Note: Mercury reticules are most effective when used with lenses near the normal focal length for your shooting format. The wider or longer the lens, the more cumbersome or imprecise a sportfinder becomes. Consider using an optical viewfinder (available new or used on ebay) for lenses that are far from normal focal length. Even for normal lenses, many users find viewfinders more intuitive to use than sportfinders.

2.6 Mercury Viewfinder

In addition to a line of ultra-simple sportfinders, Mercury Works also makes three sizes of Viewfinder. The Mercury viewfinder contains no optics—it is a simple framing device. However, it is typically faster and easier to use than a sportfinder, as two different squares do not need to be aligned: you simply need to keep the images centered in your vision. The viewfinder is enclosed, so it blocks out all light and frames your subject more clearly.

Unlike the Mercury sportfinder, the Mercury viewfinder includes a front “cap” that allows you to insert masks. Masks made from black cardstock can be easily cut to any aspect ratio and format you wish; this makes the viewfinder extremely versatile. Viewfinder caps are black by default, but can be made in any standard Mercury highlight color, to match your other camera highlights.

Each viewfinder includes a removable rubber eye cup for comfort. Because the eye cup properly spaces your eye, it is required. However, you can replace the included one with certain other eye cups that conform to the “Nikon 22mm square” format.
Mercury viewfinders contain a front plate that can be removed in order to insert frame guides. This allows you to customize the field of view to match strange formats (panoramic, square, etc.) and longer focal lengths. Inserts work best if they are printed on black card stock and carefully cut out with an X-acto knife.

Because Mercury viewfinders are non-optical, they aren't practical for wide angle lenses. They are only sized up to a normal field of view. Their field of view numbers correspond to Mercury sportfinders; for example, a #3 Viewfinder will have roughly the same field of view as a #3 sportfinder. Viewfinders are available in sizes 1, 2, and 3 only.

Hoodman H-RAV Right Angle attachment: Mercury viewfinders can be used with Hoodman's right-angle viewfinder attachment. This attachment swivels, allowing you to user your viewfinder from any angle, making certain very low angle and other shots possible. The H-RAV comes with a set of interchangeable mounts. You will need to use the “Nikon 22mm Square” attachment. The two metal side prongs on the mount need to be bent upward to allow more clearance for this to fit properly on the Mercury viewfinder. You will also need to insert a small spacer under the metal tab on the top part of the H-RAV Nikon mount. One of these spacers is included with each Mercury viewfinder. Use caution when an H-RAV is attached to Mercury, as it is somewhat heavy and rather elongated, making it the perfect lever to break your viewfinder if you press down too hard to bang it against something.

2.7 Third Party Optical Viewfinders

Many different companies have made accessory optical viewfinders over the years, usually for lenses that are out of the normal range (and thus unlikely to have viewfinder lines built into cameras). The used market affords many such viewfinders, and they can be a good investment. Some companies (such as Voigtlander) still make high-end optical viewfinders, though they can be quite expensive. Others make inexpensive, plastic optics finders; these can also be great options for Mercury. Check Ebay for these sellers.

A special category of optical viewfinder is the Multi-finder. These are most commonly crop style finders, which have a dial that progressively crops the finder for various focus lengths. They work well but tend to be quite large, and are less effective at longer focal lengths.

A second form of multi-finder is the Turret Finder, originally invented by Zeiss, later copied by Kiev (the Soviet brand), and also made in various forms by Walz and others. These are also rather large and heavy, but give you a true optical viewfinder for various focal lengths. They can be quite useful if you have a number of lenses whose focal lengths match up with those included in the turret.

Finally, there are zoom multi-finders. These are more compact than turret finders, as they basically consist of a single zoom lens that can be adjusted to different focal lengths. These tend to be very expensive.

A note about format: Most vintage optical finders on the market are designed for the 135 format. Some are designed for medium formats. It is very important to note this. You can use the Mercury chart in this guide to find the field of view equivalents between different formats. Depending on the format you're shooting, you will need to know which “equivalent” finder to use. Use the chart above to find such equivalences. Here are some wider angles not represented on that chart:

6x9mm	4x5	645/ Instax Mini	Instax Wide	35mm
35mm	53mm	28mm	45mm	15mm
38mm	75mm	35mm	50mm	18mm
50mm	90mm (a bit wider)	38mm	65mm	21mm
58mm	90mm (a bit cropped)	47mm	75mm	24/25mm

A good source of inexpensive viewfinders in these 35mm focal lengths is the seller boriska_gr on Ebay. Note, however, that his non-standard cold shoe feet need to be filed down to fit properly, or a Mercury universal cold shoe needs to be superglued to the bottom of it.

Finder Considerations

Which type of finder is best for your situation? In general, the wider the lens, the more it will benefit from the smaller size of a third-party optical viewfinder. The same goes for long lenses: though both sportfinders and non-optical viewfinders for long lenses are quite small, they don't magnify their subject, and can thus feel a bit imprecise.

Around the normal range, however, non-optical finders work quite well, and moreover, there aren't many third-party optical viewfinders in the normal focal length (except multi-finders). The Mercury viewfinder was designed to fit this niche.

The following chart lists advantages and disadvantages of the various types of finders available:

Finder Type	Advantages	Disadvantages
Mercury sportfinder	Inexpensive, fairly wide range of focal lengths, extremely light and small for travel	Easily broken, not as precise, takes a bit of skill to use quickly and accurately
Mercury Viewfinder	Tougher, very light, can accept masks for any format and aspect ratio, can match color highlights on camera, can be used with a right-angle adapter	Larger than optical viewfinders, only covers a narrow set of focal lengths
Third-party Optical Viewfinder	Smallest, can cover wider focal lengths, better view for longer lengths	Rarely available in normal focal length, can be expensive
Third-party optical multi-finder	Single device can cover a range of focal lengths	Can be large and heavy, expensive, doesn't always cover your focal lengths

2.8 Ground Glass

Mercury Works makes ground glass backs that fit our Graflok 23 and Graflok 45 back adapters. Ground glass displays the actual image your camera will take. It is upside-down and reversed left-to-right, but gives you the most accurate possible representation of your current framing and focus. It is also a lot of fun! To use ground glass effectively, however, you need to be shooting with your camera on a tripod, and with some means to block ambient light from hitting the glass. A photographer's “dark cloth” or a jacket can be used to shield the entire camera. You can also use a loupe (magnifying device) designed for ground glass. This device presses up to the surface of the ground glass and not only magnifies your image (necessary for precise focusing) but also blocks ambient light from hitting that point on the glass. The Mercury 6x9 ground glass back for Graflok 23 also contains a lip to which you can attach your own light-blocking frame.

2.9 Range Finder

There are many ways to focus a Mercury (see). One of the most popular, for handheld shooters, is to use an optical range finder. This vintage device uses two windows and internal mirrors to produce two overlapping images in a viewfinder that you hold up to your eye. You choose a subject and bring the two overlapping images together by turning a dial. Once you have dialed in your focus, you check the wheel to see what distance it is reading. Then you transfer that value to your focus unit.

For extensive reviews and information about the most popular brands and models of accessory range finders, see our Rangefinder Roundup online.

While many accessory range finders come with standard cold shoes, many others do not. In these cases, there are cold shoe feet available from Mercury Works that you can screw or glue onto your range finder so that it can easily and securely mount on your Mercury. Use the following chart to determine which Mercury part to order. Models covered in our online guide but not listed here possess standard cold shoes by default.

Range Finder	Mercury Cold Shoe Part	Attachment Method
Saymon Brown	Tall Narrow, With Lip	Glue
Leica / De-Jur / Measure-Rite	Tall Narrow, With Lip	Glue
Ideal	Short, With Lip	Glue
Hugo Meyer	For Hugo Meyer	Original screws (replace existing foot)
Walz	For Walz	Press fit, sometimes glue. (Only needed when original cold shoe is missing, which is common.)
Kodak	For Kodak	Original screw (replace end cap)
Generic (any other finder)	Try “Short, With Lip,” then decide if need to go with tall, with narrow, or with no lip	Glue

2.10 Other Cold Shoe Accessories

The Mercury can accept most cold shoe accessories. If you have an accessory you wish to mount that has a ¼-20 threaded socket (standard tripod socket) instead of a cold shoe, you can purchase, on Ebay, a cold shoe to ¼-20 adapter.

If you wish to mount an accessory that has neither a cold shoe nor a ¼-20 socket, you can purchase a generic cold shoe from Mercury Works and glue or screw it into place. Besides those designed for specific range finders (see above), we make the following generic cold shoe feet:

Short, With Lip (best, if you can position the foot at the front edge of your accessory)

Short, Without Lip (can be mounted anywhere on the bottom of your accessory)

Tall (use if need to clear some surface feature on the bottom of the accessory)

Tall Narrow, With Lip (or thin accessories)

Tall Narrow, Without Lip (for special cases)

The most common way to mount these generic cold shoes to your accessory is to sand the mating surface of both pieces, then use Super Glue.

2.11 System Lenses

2.11.1 Introduction: View Lenses vs. System Lenses

There are three basic types of lenses available in the world of photography, defined by their characteristics and how they integrate with a camera. The first is a fixed lens. These are common on cheap cameras such as point-and-shoots, devices with built in camera chips such as phones, and even some specialty high-end cameras. Some very high-end camera systems utilize fixed lenses as well, such as many aerial cameras. A fixed lens may be removable for service and calibration, but it is not designed to be removed in regular use. While Mercury can accept many fixed lenses once they have been removed from their original camera system and appropriately mounted in a Mercury lens stack, this User Guide does not cover those specialty lenses.

The second type of lens is designed for autonomous use. It has, built-in, its own shutter and iris. These are often referred to as “large format” lenses, as they tend to be high-end and are famous for their longtime use on large format cameras, but this is a misnomer, as this style of lens can be made for many different formats, and utilized on non-large-format cameras. There is no standard, universal name for these lenses, but Mercury Works designates them as “View Lenses.” This a shortened version of “view camera lenses,” which is preferable to “large format lenses,” but still assumes a particular type of camera, if no longer a particular format. “View lens” is the best we can do with the legacy of nomenclature we have to work with. We mean a lens with built-in shutter and (usually) iris, one or two removable glass elements that screw into that shutter, and the ability to mount to a flat platform via a retaining ring or flange. These lenses are often (but not always) designed for medium or large format cameras, have a high degree of universality to them (they tend to be agnostic about what sort of camera you mount them to), and lack any internal focusing ability. Typically, then, they require a camera system that can variably and precisely position them at different focal distances in order to achieve variable focus. We call them “view lenses” because the type of camera that can manage this is usually the type of camera that works with a straight light path and eschews prisms and mirrors. That this, they avoid reflex viewing systems. The image is mean to be viewed (if at all) directly on the focal plane using ground glass. Any focus marks must be on the camera itself.

Mercury loves view lenses, and can make use of a much wider range of them than most other existing cameras. The preceding Lens Stack section of the User Guide is chiefly about how to configure your camera to use a view lens.

System lenses, on the other hand, are designed to be tightly coupled with a particular camera system. They tend to have proprietary mounts and tight integration, either mechanically or electronically, with the camera. Because system cameras have a single mount at a set flange distance, every system lens must be designed so that its mount falls at exactly the same flange distance. This is an enormous constraint for lens designers, and system lenses therefore tend to incorporate many design compromises that introduce optical aberrations and/or significantly higher manufacturing cost. For this reason, view lenses are often superior. However, many amazing system lenses have been manufactured, and they can also have advantages.

Typically, system lenses do not contain a built-in shutter (though there are significant exceptions to

this), but *do* have built-in focusing. They also always have a built-in lens barrel. This can add significant size and weight to some lenses, but makes it very convenient to swap lenses: the camera doesn't need to be re-configured or re-adjusted in any way (that convenience is the main driver of system photography, despite its limitations).

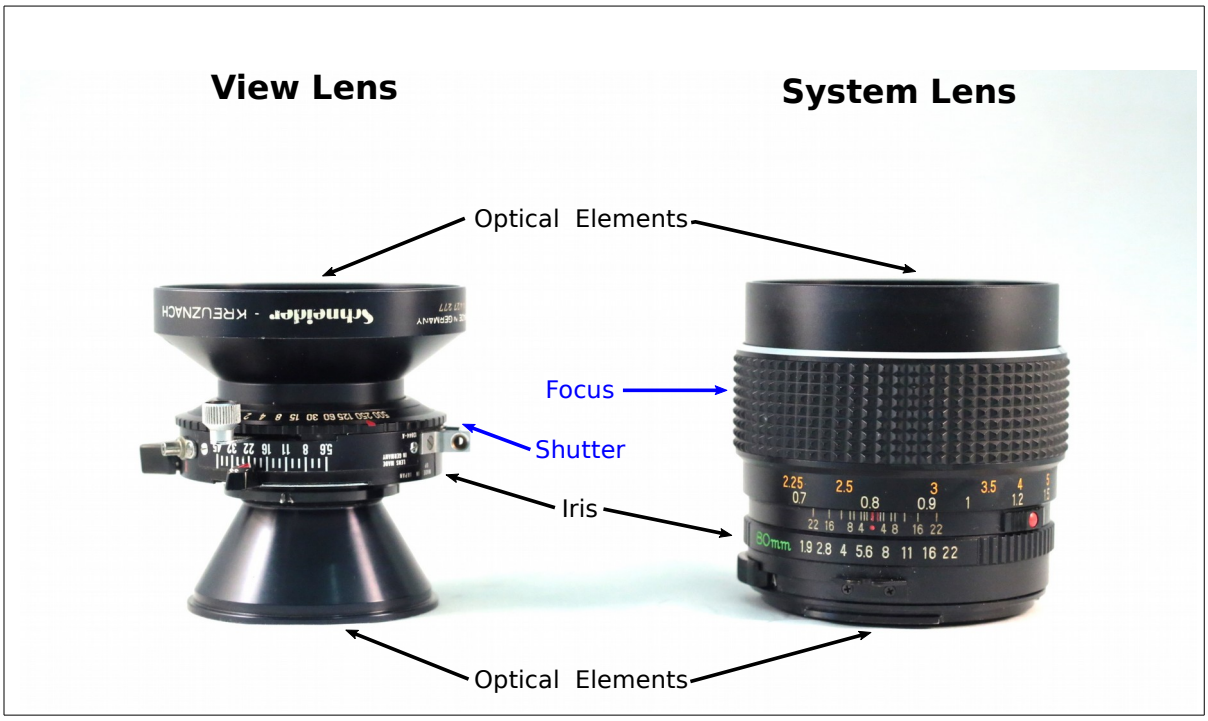

Given these differences, and the radical design difference between typical system and typical view cameras, it may seem surprising that Mercury can adapt both types of lenses, but it can.

When Mercury uses a view lens, it must properly space that particular lens to be able to achieve infinity focus, and must provide a focus unit to focus throughout a range of distances. The lens takes care of the aperture and shutter speed.

When Mercury uses a system lens, it must even more precisely space that mount system so that each lens perfectly starts at infinity by default. It must also provide a shutter, since the lens doesn't have one and expects the camera to have one. It must also provide a proprietary mount to which the lens can attach. No focus unit or scales are necessary, however. The lens itself provides the focusing and iris.

Which is Better?

The lens you already have is usually the best. Especially if you already own multiple lenses for a particular system, you may do well to get a Mercury system lens adapter kit and a shutter, and be in business. A Mercury thus configured retains one of the great advantages of system lenses: any lens from that system can be easily and quickly swapped without adjusting or reconfiguring anything on the camera. One Mercury kit opens up compatibility with any lens in that system. Because they are so plentiful on the used market, system lenses can also be less expensive than their view counterparts.

Disadvantage to system lenses on the Mercury include the heaviness of the lenses, which usually incorporate heavy metal bodies, often of longer length than is strictly necessary, due to the flange distance limitations of system cameras. Another signifcant disadvantage is that because Mercury is dependent on a vintage Ilex No. 4 or Copal 3 shutter, its top shutter speed is limited, and the light path is restricted to the shutter's max opening. In practice, this means that most lenses will start to vignette at anything larger than their intended format size. So while a lens may technically be capable of exposing a larger format than that for which it was intended, in practice most medium format system lenses are restricted to their nominal format. Of course, you aren't *losing* anything, as that's all the original system cameras were capable of exposing anyway, but the fact remains that Mercury can expose that lens to many different formats, and yet remains restricted in the image circle that will pass through the shutter.

Wide Angle Lenses: View lenses are unquestionably superior to system lenses in wide angle variants. This is because view lenses tend to be “true” wide angles, designed for short flange distances and containing no compromises. Only certain cameras can actually make use of ultrawide view lenses. Mercury is one of those cameras. System lenses, however, have fixed flange distances, and often quite long ones (to make room for mirror boxes on their cameras), and wide angle lenses must therefore include retrofocal elements to try to refocus their image at longer flange distances. This greatly reduces image quality, increases size and weight, and increases cost.

Normal Lenses: Lenses near the normal focal length for their intended format tend to be high quality in both view and system configurations. Here you will often see a price advantage for system lenses, given how many have been produced. This is a toss-up: normal view lenses are even smaller and lighter, and have better shutter options and usually produce larger image circles for more format options, but normal system lenses are often cheaper, don't weight that much, and are often faster.

Long Lenses: As you start to get past “normal” focal lengths, system lenses have the advantage over view lenses. Their built-in barrels make them easier to use, and system lens manufacturers have long worked to perfect telephoto designs that cut down on weight but keep optical quality very high. There are some good telephoto view lenses, but they are fairly expensive. Most long focal length view lenses aren't really intended to be long lenses; they are intended to be normal or very slightly long lenses for much larger formats. They require a great deal of camera extension (i.e., a very long lens stack), and don't offer many advantages. Therefore, if you really want to shoot with long lenses, particularly in medium or small formats, using a system lens can be a very good idea.

Three types of system lenses (Medium Format, 135, and Hybrid) are each discussed in their own sections below.

2.11.2 Using Medium Format System Lenses with your Mercury

A medium format system lens configuration involves a shutter board designed for a particular vintage shutter, sometimes a standard front spacer underneath that board, a thin “shutter spacer” ring, the shutter, and a Mercury system lens-to-shutter adapter for the particular system you're adapting:

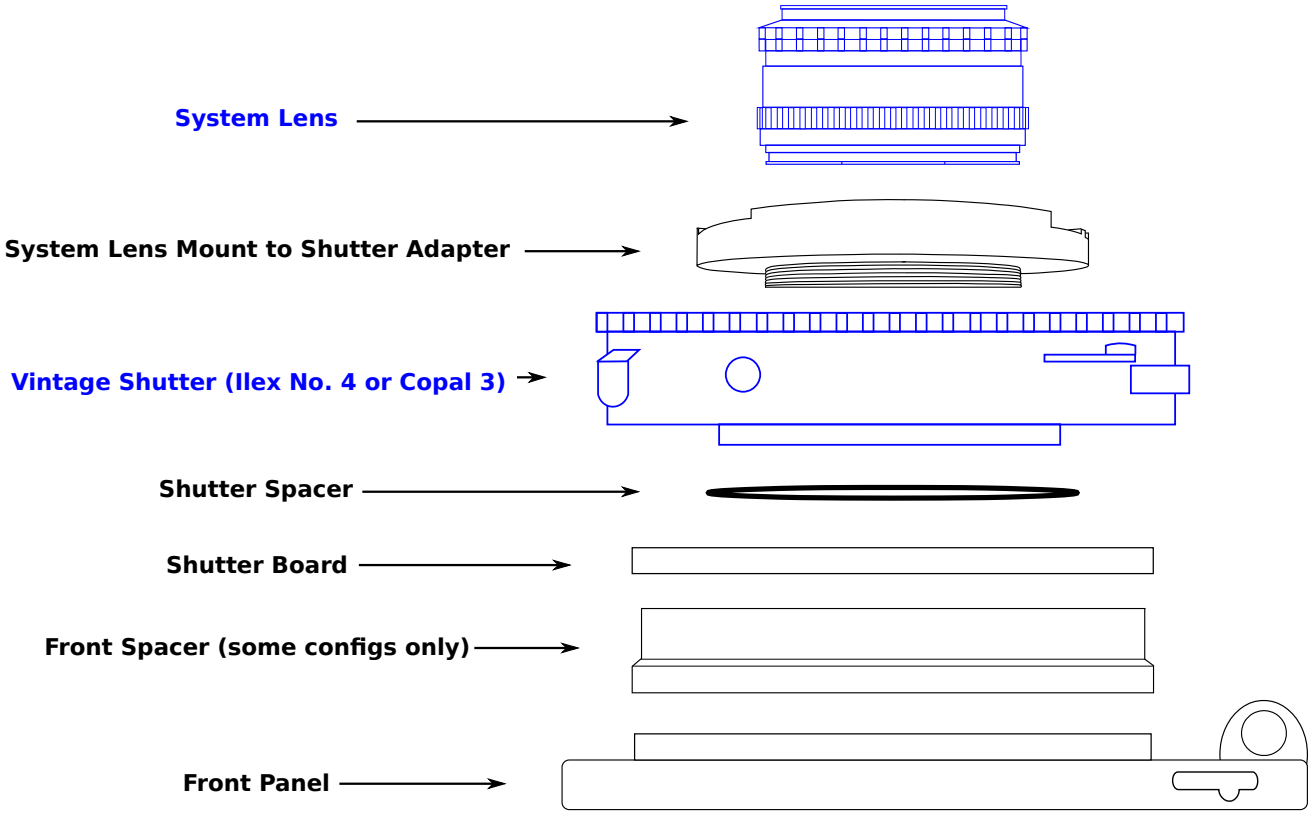

See Example #3 in the first section of this User Guide for a specific example of a medium format system lens config.

The proper system lens stack configuration can be found in the chart below. It is also indicated, however, on the back side of the Mercury shutter board that comes with any medium format system lens kit:

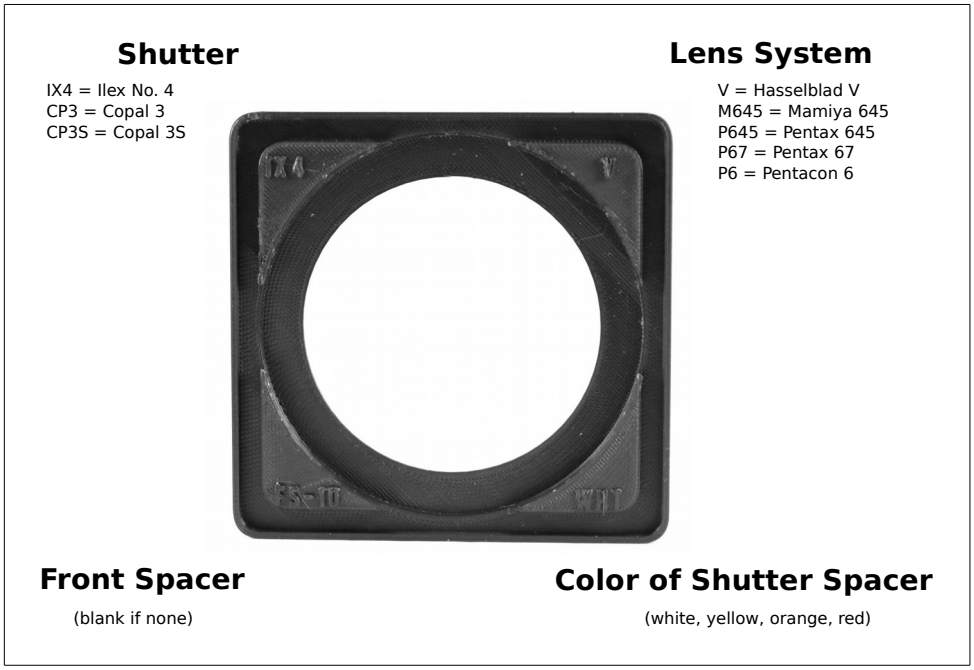

Shutter Spacer: The shutter spacer is a very thin ring. Different thicknesses are color coded as follows:

white = .5mm
yellow = 1mm
orange = 1.5mm
red = 2mm

These spacers allow you to fine tune the infinity spacing of a system lens stack. The shutter spacer press-fits onto the back of your shutter (over the mounting threads) and is sandwiched between the shutter and the shutter board when you tighten your retaining ring or flange.

When testing your system lens config, if infinity focus is slightly off from what is indicated on your lens, and you wish to correct it, you can add small strips of tape or shim stock to this ring to make it thicker, or you can remove it and replace it with thinner tape. The thinnest tape is copper foil tape, but regular Scotch tape works fine as well (it is approximately 0.1mm thick).

Note that system lenses often have somewhat inaccurate focus scales. Always double check that when your infinity point is correct, your close focus is as well! If it isn't, you have to choose which to hold constant. In many cases you can make changes to your lens' focus scale by writing in marks or adding stickers to indicate more accurate marks.

Shutter: The Ilex No. 4 shutter works with all Mercury system lens kits (both medium format and small format), and is therefore the most versatile choice. However, many medium format system lens kits can also use a Copal 3 shutter. Copal 3 shutters tend to be newer and thus in better working condition than Ilex No. 4s. They tend to have faster max shutter speeds and more on-lens features (every Copal 3 has a aperture preview and X-sync, for example). Copal 3 shutters tend to be significantly more expensive than Ilex No. 4s, yet are also generally more available on Ebay.

Some medium format system lens kits can also use the Copal 3S. This shutter is often mistaken for a

Copal 3. It's internal mechanisms are the same, but its external dimensions are different. Older Copal 3S shutters were simply labeled “Copal.” Later models are actually labeled “Copal 3S,” but these are far more rare. Regular Copal 3 shutters are always labeled “Copal 3,” so if it looks like a Copal 3 but just says “Copal,” it is actually a 3S. In any case, these two variants require different Mercury kits, so double check!

If purchasing an Ilex No. 4, you must be aware that there are many variants on the used market, as this shutter was manufactured for over fifty years! They key features, however, are all indicated by text:

“Acme” If the Ilex No. 4 also says “Acme,” it does not mean it's from a Warner Brothers cartoon. It means that it is a shutter that you cock first, and then fire. This variant has the fastest max shutter speed.

“Universal” This means that it is a “press” shutter. The release action both cocks and fires the shutter automatically. This is faster and can be more convenient than Acme variants. However, these have a slower max shutter speed, and often lack aperture preview and flash sync (though not always).

“Synchro” This means that the shutter has flash sync. If this word isn't present, the shutter probably can't sync to flashes or digital backs. “Acme syncho” variants generally have a second cocking lever for the flash sync. You need to cock both levers if you want your next shot to send a sync signal. “Universal synchro” variants don't have a separate sync lever (much more convenient). The downside is that you also can't change the sync delay. However, most of these default to X-sync (no delay), which is what you want.

“Made by Ilex Optical Company for Eastman Kodak...” Beware! If the shutter says this, or doesn't have a prominent (i.e., large) label, and has lots of small text, or a Kodak lens is mounted in it, *it will not work for your Mercury system lens kit*. For whatever reason, Ilex deliberately made all of their Kodak shutters incompatible with their standard shutters. It will still say “Ilex No. 4,” but it isn't really an Ilex No. 4. Unfortunately, many of the Ilex shutters on the market are of the Kodak variety, so check carefully before purchasing!

System Lens Mount to Shutter Adapter: This Mercury adapter threads into the front of your shutter. Because these threads are very fine, please be very careful when doing this, especially for the first time (when the plastic threads will meet the most resistance). It is extremely easy to cross-thread these, so check to be sure that it is really going in smooth and level. If not, back it out and try again. Better to try many times than to ruin your adapter by forcing it in!

Thread this in all the way until you feel that it is at its maximum. However, take care not to over tighten. You can also damage your threads this way. This adapter is designed to be “finger tight” only. Don't apply much pressure after it has reached the end of the adapter's threads.

Your system lenses mount directly to this adapter. They think they're being mounted to their intended system camera, but of course you have fooled them and they are now playing Mercury's game.

Configuration Table

The following table lists the possible medium format system lens Mercury configs. If a shutter is not listed for a particular lens system, it means that it is not compatible.

Lens System	Shutter	Bolt Length	Washers	Front Spacer	Spacer Ring
Mamiya 645	Ilex 4	14	3	None	white
Pentax 645	Ilex 4	14	2	None	white
	Copal 3	14	3	None	none
	Copal 3S	14	4	None	white
Hasselblad V	Ilex 4	25	3	10	white
	Copal 3	25	4+4	None	red
	Copal 3S	25	4+3	None	red
Pentacon 6	Ilex 4	20	3	None	white
	Copal 3	14	2	None	red
Pentax 67	Ilex 4	25	2	10	white
	Copal 3	25	4+3	None	yellow
	Copal 3S	25	3	10	white

Usage Notes

Maximum Format Size: System lens kits, due to the spacing involved and shutters used, almost always vignette lenses mounted to them beyond the nominal format of that lens. In other words, don't expect a 645 format lens to produce a larger image circle than 645, a 6x6 lenses to produce larger than a 6x6 image circle, etc.

Fast F-Stops when handheld: Many system lenses have particularly fast maximum apertures. Due to the inherent inaccuracy of many built-in focus scales and the potential for mis-calibration (unless you've tested your config very well), it would be wise to never shoot at a wider f-stop than 5.6 when shooting handheld and relying on a range finder to dial in distance.

System lenses with built-in shutters: While rare, some medium format system lenses have built in shutters. All Hasselblad V lenses do, but they cannot be cocked and fired manually—only by a Hasselblad camera, so they are useless on Mercury. Some M645 lenses made for the 645 Pro generation of camera have internal shutters. These models are indicated by “LS.” Four were made: 65mm, 70mm, 80mm, and 150mm. These lenses can all be manually cocked and fired (with a cable release). There is also a leaf shutter variant of the Pentax 67 90mm f/2.8. (Note that the P67 140mm leaf shutter variant, unlike the 90mm, can not be manually cocked and fired, and thus won't work with Mercury).

When using one of these leaf shutter lenses with Mercury, you can choose to use the large format shutter or the internal shutter on a shot-by-shot basis.. If using the internal shutter, you must set the large format shutter to aperture preview (i.e., open), or fire it on the T setting to be sure that it is open. When using the large format shutter, you must be sure that the internal shutter blades are open.

If using flash sync with a flash or digital back, don't forget which lens you need to connect! This may necessitate two different sync cables. Most Ilex shutters use bipost sync connectors rather than PC. This will require a special sync cable. Ask Mercury Works if you need something you can't find online. We also make a special Dual Sync cable that connects to an Ilex shutter via bipost and your lens' PC port at the same time, passing a sync signal when either of the shutters fires.

Another issue to be aware of is this: system lenses with built in shutters open the shutter in the process of cocking it, letting light through. So when using these built-in shutters, you must always have a dark slide in when cocking the shutter.

Mercury Ilex Shutter Spacer: Mercury Works makes an Ilex spacer that can actually replace the Ilex shutter if you have leaf shutter lenses and wish to use those internal shutters exclusively. This allows you to configure your Mercury for system lenses without needing a large format shutter.

We also make a variant that is 20mm shorter, allowing these lenses in certain configurations to shoot with RS-20 backs and back adapters!

The Mamiya 645 LS series and the Pentax 67 90mm f/2.8 lenses have built-in shutters that can be used with the Mercury Ilex Shutter Spacer.

You can also use these lenses normally, mounted on an Ilex 4 shutter. In this case, you can choose between two shutters (the Ilex or the built-in). Just remember to fix the one you *aren't* using in the fully option position! If you are using flash sync or a digital back, remember to connect the correct cable to the shutter in use. Mercury also makes a Dual Sync cable that connects to both your lens' shutter and your Ilex 4. With this cable you can keep both lenses connected at all times.

Also note that for all system lenses with built-in shutters: these lenses typically open the internal shutter in the process of cocking it, so you must have a darkslide in when cocking the shutter!

2.11.3 Using 135 System Lenses with your Mercury

The most common lenses out there are 135 format and belong to 35mm SLR systems. Due to their very short flange distances, these lenses cannot be mounted to any standard medium format Mercury config like medium format system lenses can. Rather, a special Mercury body is needed. This body, called an “Integrated Panel,” combines a special shutter mount with a built-in back adapter (either Gralok 23 or a digital back mount). These configs are therefore less flexible and modular than comparable medium and large format ones. However, these integrated panels are very thin and don't cost much in comparison.

Most 135 system lenses only work with the Ilex No. 4 shutter. That shutter screws directly into the Integrated Panel, unlike other setups where it attaches with its own flange as a retaining ring. A 135 system lens mount to shutter adapter then screws into the shutter, as usual. Lenses can then mount to that directly.

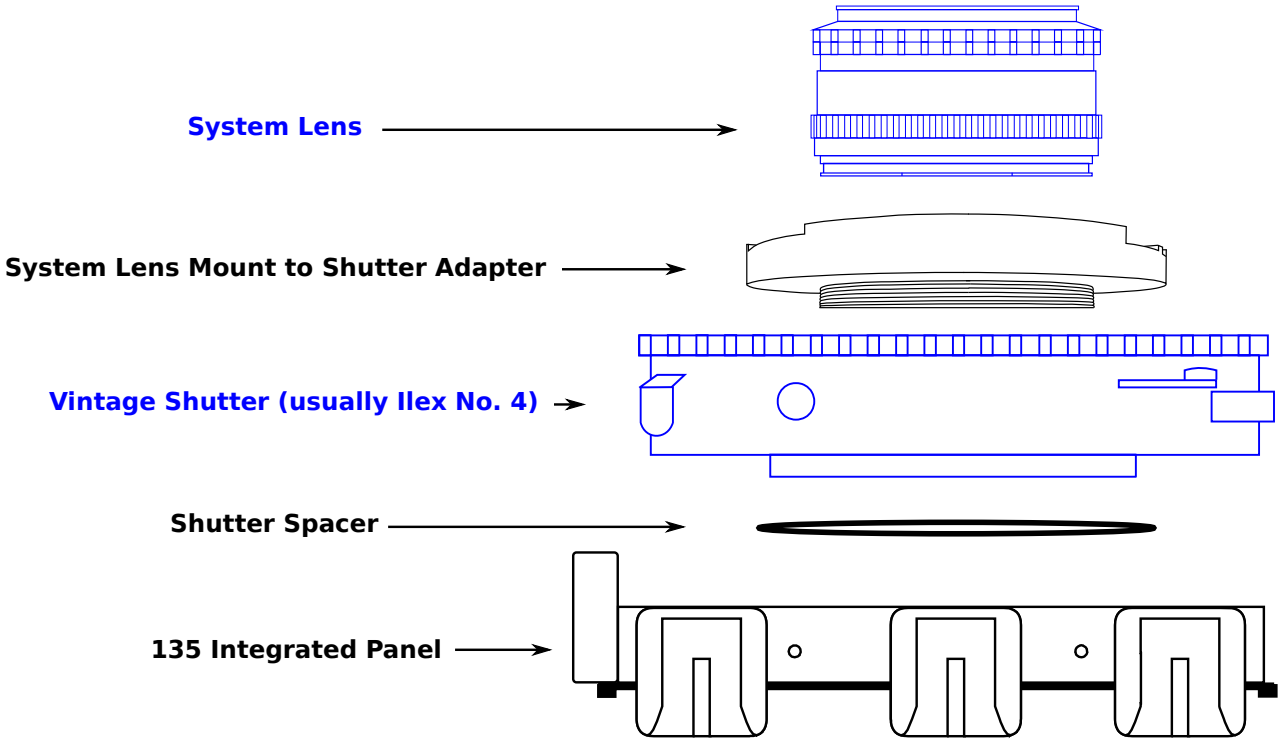

The following table shows the possible Mercury configs for different 135 system mounts:

Lens System	Shutter	Merc Body	Shutter Spacer
Canon EF	Ilex 4	Ilex 4 Front Graflok 23 Back Ilex 4 Front Mamiya 645AFD Back	~0.2mm tape
Minolta SR/MC/MD	Ilex 4	Ilex 4 Front Graflok 23 Back Ilex 4 Front Mamiya 645AFD Back	none
Konica Hexanon	Ilex 4	Ilex 4 Front Graflok 23 Back Ilex 4 Front Mamiya 645AFD Back	none
Canon FD	Ilex 4	Ilex 4 Front Graflok 23 Back Ilex 4 Front Mamiya 645AFD Back	orange
Leica R	Copal 3	135 Copal 3 Front Graflok 23 Back*	yellow

* Due to thread lengths, shutter thickness, and flange focal distances, Leica R is the only 135 system lens mount to work with the Copal 3 version of the Mercury 135 Intregrated Panel, and even then only the Graflok 23 version. A Copal 3 to Mamiya 645 AFD Integrated Panel exists, but so far no lens system can make use of it (even the Leica R's flange distance is too short).

Other lens systems: Most other SLR 135 lens systems can be adapted to Canon EF. To use them, purchase an adapter online and use with the Mercury Canon EF lens kit. These include, but are not

limited to:

Nikon F
Olympus OM/MD
Contax C/Y
M42
Pentax K
Exakta

Calibrating Infinity: Unlike medium format system lenses, which are fairly consistent, 135 system lenses for a particular system are often made my different manufacturers, or utilize adapters from their native mount to this system, and thereby vary a bit in their exact flange distance. A more careful calibration is thus recommended for 135 system lens configs.

As described in , you can utilize tape in conjunction with your shutter spacer ring to subtly change the flange distance of the lens until you achieve infinity at the same point that is indicated by the lens' scale. It is also possible Of course, it is still possible in many cases to alter the lens' scale rather than the Mercury config. At any rate, you should not assume (as you could with medium format system lenses) that the kit is automatically accurate. Always do a calibration test to make sure you are hitting infinity at the right place.

2.11.4 Using Hybrid System Lenses with your Mercury

Some system lenses contain the attributes of both system and view lenses. Two examples of these that are compatible with Mercury are Mamiya RB67 lenses and Mamiya Press lenses.

Mamiya RB67 Lenses:

Mamiya's immensely popular (among professional studio photographers) RB67 system was made from 1970 to approximately 2010. The camera was nicknamed the “boat anchor,” and let's just say that you don't want to be hiking farther than your front door with one. But the lenses, beloved by many, are plentiful and inexpensive on the used market. If you already own a collection, or want to shoot with longer lenses, investing in a Mercury RB67 lens mount may be wise.

RB67 lenses are like view lenses in that they contain internal shutters and lack built-in focusing. They also have much larger image circles than their nominal format (6x7cm). On the other hand, they contain a single, fixed flange distance proprietary lens mount, and built-in lens barrels, like other system lenses. Like Hasselblad lenses, they rely upon the camera to cock the shutter, though unlike them, they can be operated entirely from the lens itself.

RB67 lenses can work with any Mercury config, medium format or large format, up to RS-20. You simply need an XL Focus Unit, our special RB67 XL Plate, and a third party adapter available on Ebay.

Here's the adapter: “Mamiya RB67 Lens Board Adapter.”

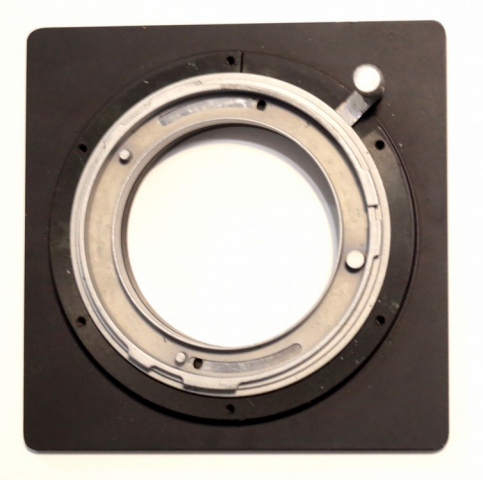

It is available on ebay from a seller in Hong Kong. When you receive it, you will disassemble it and harvest several parts, which will then integrate with the Mercury parts.

To use an RB67 lens on Mercury, you need this third party adapter, a Mercury XL focus unit, and a Mercury RB67 XL Adapter Plate. You will also need a mechanical shutter release cable. This is what it looks like when mounted to an XL Focus Unit:

For assembly and usage instructions, see supplemental document: “Mercury RB67 Adapter Instructions.”

Note on Spacing: This config requires an FS20 spacer between the camera and the XL Focus Unit. If you wish to shoot with RS20 back adapters or backs, you can remove this front spacer. However, the XL focus unit won't mount to a standard Mercury Front Panel without this spacer. If you want to shoot with this setup at RS20 (on large format, for instance), you will need the Mercury XL Front Panel, which allows for this setup, extends your tripod mount foot lower to clear the XL focus unit and give you more working space, and extends the handle so you can get a better grip when using the XL Focus Unit. It is thus recommended for this setup, but not required when in the standard (FS0) config. The XL Front Panel is fully compatible with all other standard configs and parts as well; it is just a big bulkier.

In the unlikely event that you need to shoot with an RB67 lens at RS30 (for example, if you want to use it in conjunction with the Instax Wide Back for Graflok 23), you will need the special XL-S Front Panel, which integrates a Graflok 23 back with a standard front panel, but at RS10.

This kit works extremely well, allowing you to cock the lens shutter with a simple lever, and then fire it with a standard cable release. Mercury Works has focus scales available for a number of RB67 lenses, and you can also easily make your own if you have a ground glass or digital back. Depth of Field scales are built in to RB67 lenses, and therefore external scales aren't used for this config.

Mamiya Press Lenses:

Mamiya Press lenses are really view lenses that have been mounted on a special helical board that makes them behave more like system lenses. The board mounts all of the view lens components (shutter, flash sync port, and cable release port) and adds a helical focusing system with built-in depth of field and focus scales. Each board also contains a proprietary system mount, and is constructed such that it properly spaces the lens to match that mount's standard flange distance. The result is a strange hybrid between view and system lens characteristics.

Because they are view lenses, any Mamiya Press lens can be dismounted from this board and mounted to a Mercury shutter plate. Our lens kits made for these lenses include an extra mounting area and a couple of extra components to enable the remounting of your flash sync port and the recreation of a cable release port if you wish. (Note: Flash sync will require you to add a second ground wire to the port, attached to some metal point on the shutter itself. The original configuration uses the body of the camera to ground this connection.) This is the lightest and best integrated configuration for these lenses, but won't work if you wish to continue to use your lenses on Mamiya Press cameras, don't wish to do the extra work, or want to keep the Mamiya focusing system. Accordingly, Mercury Works developed the M-Press Lens Adapter. This adapter allows you to directly mount and dismount Mamiya

Press lenses on their original lens boards.

The full lens stack consists of (starting from the front of the camera) an FS10 spacer, an FS15 spacer, then the M-Press board.

When used with an RS10 config, you can simply remove the FS10 spacer. When using with an RS20 config, however, both spacers must be replaced with a specially designed FS-5M. This is a 5mm front spacer that correctly interfaces with the M-Press board. It is sold as an optional accessory.

One common Mamiya Press lens, the 100mm f/3.5, is actually retractable by 10mm. With the FS10 spacer removed and the lens in the retracted position (from which it still fully functions), you can achieve an RS20 config. Or, using the FS5-M spacer and the lens in the retracted position, you can achieve RS30.

Calibration: For focus accuracy, you should calibrate your M-Press adapter. Use a fast Press lens and a digital or ground glass back. Set the Press lens focus scale to infinity. Check to see that your infinity target is sharply in focus. If it isn't, you may need to shim the M-Press adapter slightly using strips of tape (any kind. Place them on the top surface of the 15mm Front Spacer—the one that makes contact with the bottom of the M-Press adapter lensboard. Once you have achieved infinity focus, check a close focus point. Adjust again if necessary, until both appear to be in focus at their respective focus ring positions. When using the M-Press adapter in the RS-20 position, the FS-5M spacer may require extra shimming.

Mamiya Press Lenses without mounting notches: Some later Mamiya Press lenses were manufactured without the locking notches that allow them to properly lock into place on the full line of Mamiya Press cameras. This is because Mamiya changed the locking mechanism on the Mamiya Universal Press Camera (the last model they released) and apparently wanted a couple of their newest lenses to be incompatible with all other cameras in the line. Later 75mm and 50mm lenses in particular are affected. Just as with older Press cameras, these lenses will mount on the Mercury M-Press adapter but won't be able to lock in place. The solution, as with other Press cameras, is to make the notch yourself. This will not harm the lens or affect its use on a Mamiya Universal Press at all—it will

simply make it compatible with all Press cameras and the Mercury M-Press adapter. See the supplemental instruction sheet for this procedure at www.mercurycamera.com.

Note about Polaroid SE600 lenses: These lenses are technically the same as Mamiya Press lenses, and you can dismount them from their Polaroid lensboard and onto a Mercury shutter plate. You cannot, however, use them on their original lensboards. They are not compatible with the Mamiya Press lens mount, and therefore won't work on a Mamiya Press camera or with the Mercury M-Press Lens Adapter.

Chapter 3: Shooting With Your Mercury

Mercury is an all-manual camera system (in most cases; of course you can add automated components if you wish). This gives you precise control over all aspects of photography, and is one of the camera system's greatest advantages—and also the reason that it is more fun than automatic cameras! However, it also means that you must pay careful attention and make crucial decisions about every step of the photographic process. The basic steps are outlined here, then described in detail in the section that follows.

1. Load film (or connect digital)
2. Set exposure
3. Focus
4. Expose image
5. Advance/eject film

3.1 Loading Film

Mercury can utilize a nearly limitless number of different recording media, and we cannot provide instructions for them all. However, here are some generic instructions for some common film backs:

3.1.1 Medium format roll film backs

These popular film backs, which take 120 or 220 roll film, are all loaded according to similar procedures. The most important thing to remember is that the roll of film begins and ends with backing paper, to which the actual film is taped in the middle. The backing paper has a black side and a printed side. The printed side is usually white, but can be other colors (Kodak is yellow). The black side is the emulsion side; it should always face the lens. The printed side should face the back of the camera (the photographer).

Generally, when you go to load a film back insert (remove it from the back's shell first!) it will contain an empty spool on the left side. This needs to be moved to the right side, where it will become the takeup spool. Your fresh roll of film goes on the left side in its place. To move and mount spools, you must press the bottom of the spool down into the spring-loaded base (Graflex and Horseman backs), or depress a button near the base of the roll that does the same (most Mamiya RB67 backs), or flip up the bottom spool holder, load the film on it, and flip it back down into place (some later Mamiya RB67 backs).

Remove the strip holding down the roll and begin to unspool the backing paper. Pull it around the back side of the film back insert (black side should be out), then around to the front on the right side. Feed the end of the backing paper into the takeup spool. Then, holding the edge of the backing paper down and helping it along with a finger so it doesn't pull off the roll, advance the film slightly (use the lever advance if you have to). Advance the film until it catches and pulls on its own.

Look for the start arrow of the film (labeled “START” for some brands of film, just containing an arrow for others). Graflex and Mamiya backs contain small indicator marks inside the film insert. Advance the film until the start arrow lines up with the indicator mark. Horseman backs have no indicator mark, but have a hole in the pressure plate. Advance until the start arrow appears in the window created by this hole (be careful—it's easy to miss it).

Graflex Start indicator

Mamiya RB 67 Start indicator

Horseman start window

Once you have lined up the start arrow, place the film back insert into its shell and close and seal the shell. Be sure your darkslide is fully closed. You can now advance the film to the first frame. This will take a fair amount of advancing (it must roll up the backing paper, then arrive at the film itself). Watch the exposure counter; it should advance to “1” and then stop. Typically, when the advance mechanism locks in place, you are at 1. You're now ready to shoot!

3.1.2 Sheet Film

Sheet film comes in many sizes, but is most common in 4x5 size. You must load each sheet of film by hand before shooting. Unlike roll film, you must load it in complete darkness (a darkroom or changing bag).

Loading:

Sheet film holders have a hinged end. To load a sheet of film, open the darkslide, then open the hinge. You can now slide a sheet of film into the holder, under the tabs on the left and right. Once all the way in, carefully close the hinge and close the darkslide (which locks the hinge in place). Each sheet film holder holds a sheet of film on each side; you should load both sides at once.

Most sheet film comes from the factory with edge coding. This is a jagged cutout in one corner. It tells you which kind of film it is if you have learned the system. More importantly, it tells you the proper orientation of the film. If you load a sheet film holder with its hinged end pointed away from you, you will want to hold the sheet of film such that the cut corner is farthest from you and on the right. If it

isn't, rotate and/or flip the sheet of film until it is. Then insert it into the holder.

This ensures that the emulsion side of the film will face out.

If you cut down your own sheet film, it is a good idea to use a hole punch to punch the correct corner of the film so you can later load it properly.

Mounting on your Mercury:

Sheet film holders were originally designed for cameras with spring backs that would press them into place. Mercury doesn't use a spring back system. There are, nonetheless, three ways you can mount 4x5 sheet film holders to your Mercury (besides just holding them in place, which works most of the time!).

Every 4x5 back adapter has notches in its top left and right cold shoes to accept industrial rubber bands (two of which come with every Mercury 4x5 back adapter). The bands are then run down the back of the camera and hook on the two small screws on the bottom of the back adapter. These bands will allow you to hold sheet film holders in place, and can be easily removed to utilize Graflok backs.

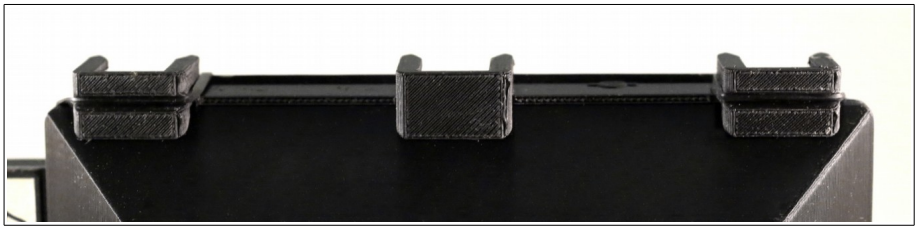

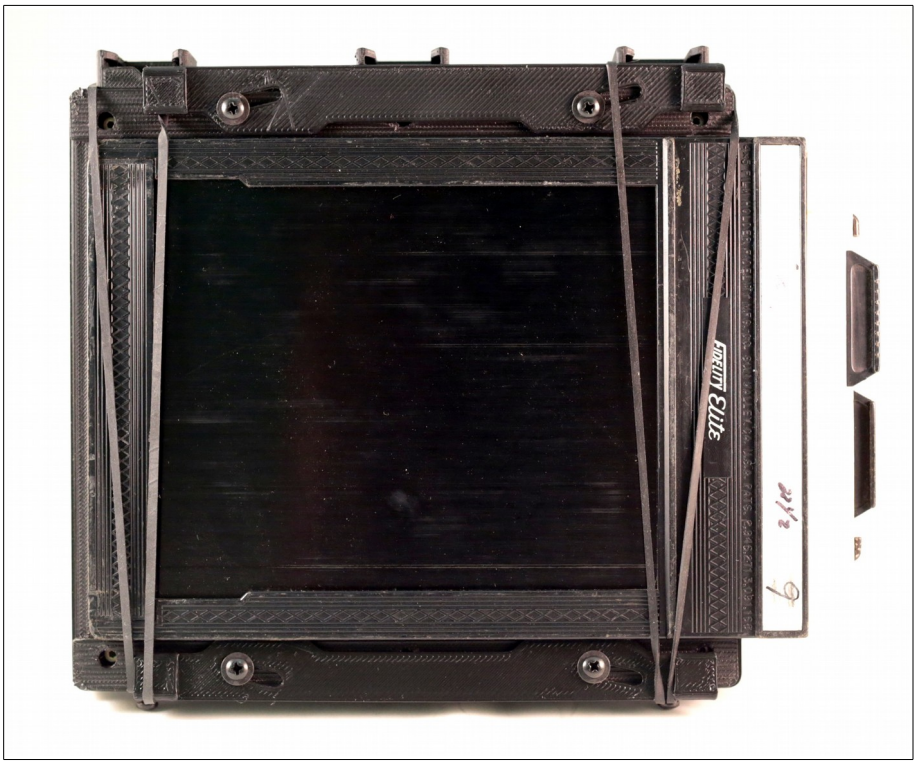

Mercury Works also makes a set of special spacers that you can use to alter your Graflok sliders so they hold sheet film holders instead of Graflok backs. This is a very convenient and secure solution, but only if you don't need to use Graflok backs.

It is also possible to cut Graflok grooves into the sides of wooden sheet film holders. This is best done by a machinist, but you can also do it yourself (very carefully) with a Dremel or wood carving tools. This is the best solution, as it converts your sheet film holders into Graflok backs.

Of course, you can forgo sheet film holders entirely and use the Graflok compatible Grafmatic, which holds six sheets of film and is far more compact. For details, see our Graflok 45 Buying Guide at www.mercurycamera.com.

2x3 Sheet Film: Here your main options are to rig your own rubber band system (there isn't one built into the Mercury back adapter), cut grooves into wooden holders (preferred), or go with the Grafmatic 23.

5x7 Sheet Film: Our 5x7 back adapter is engineered a bit differently. We created a proprietary Graflok 57 slider system, but made it deep enough to mount most 5x7 sheet film holders directly. Some thinner holders (notably the Fidelity Deluxe) require a thin spacer to mount properly. This is readily available from Mercury Works. On 5x7, 6x17 roll film backs (such as the Canham and DAYI backs) will mount fine, but each requires a special spacer that remains in place on the back and allows it to mount on the 5x7 Mercury back adapter.

3.1.3 Pack Film

Pack film (usually but not always instant film such as Polaroid 600, Fuji Instax, or 100 series) is very easy to load. Just open the film back and slide or press the pack of film into it. With Instax, line up the yellow corner of the pack with the yellow indicator on the film back. If peel-apart film, you will additionally need to feed the tabs through the correct hinged windows in the back.

3.1.4 Cartridge Film

When shooting with standard 135 (35mm) or 70mm cartridges, you load the film in the same way you would roll film, but you won't have any backing paper, so you'll need to try to waste as little film as possible (this wasted film is your “leader”). Make sure that the dull side of the film (the emulsion) is facing the lens, and the shiny side (also usually a darker color and more translucent than the emulsion) is facing the back of the camera.

Feed the end of the film through the takeup spool as best as you can. It is usually very helpful/necessary to fold the film over into a hard crease to help the takeup spool “grab” it. You can alternately avoid feeding the film *through* the spool and instead tape it to the outside of the spool and wrap it around only. Use strong tape if you use this method!

3.2 Setting Exposure

Exposure is a function of (up to) four factors:

1. film speed
2. shutter speed
3. aperture
4. neutral density filtration

Your film speed is its sensitivity rating, usually expressed as an ASA/ISO value. With a digital sensor, you can change this value. With film, you can also decide to push or pull the processing, and thereby change the value for your sheet or roll. In general, the higher the ASA/ISO value, the grainier your image will be.

This is the starting point for your exposure. You generally have more control over shutter speed and aperture, so we will cover those in far more detail.

3.2.1 Selecting Shutter Speed and Aperture

Shutter speed and aperture are expressed in *stops* (doublings of light intensity). Every time you double your shutter speed or close your aperture one f-stop, you've halved the light reaching your image plane. You need to choose both a shutter speed and aperture to properly expose an image. You can start with either, and then select its compliment to properly expose your subject. Basic considerations are as follows…

Shutter Speed: The faster your shutter speed, the more you will freeze motion. This includes movement in your subject as well as camera movement. When shooting handheld, you must maintain a shutter speed fast enough to eliminate the movement introduced by yourself when you trigger the shutter. The rule of thumb here is that your shutter speed should be at least 50 (1/50 of a second) for a normal lens. It can be a bit slower for wider lenses, and needs to be even faster for longer ones.

Aperture: Aperture directly affects your depth of field. The smaller your f-stop, the narrower your depth of field; that is, the smaller the “slice” of your subject will be in focus. This also means that you need to be more accurate and precise in your focusing. In addition, the lower your f-stop, the softer your image will be. This is also true as you hit f22 and higher. For these reasons, you will usually obtain the sharpest results from f8 to f16 (though this can vary by lens type). When shooting handheld with a range finder for focus, an f-stop of f11 or f16 is recommended.

3.2.2 Using a Light Meter

Once you have an idea of what f-stop and/or shutter speed you'd like, and you know your ISO, you can

use a light meter to measure how much light is available for your subject, and thus what your reciprocal value should be. Most digital light meters allow you to choose your f-stop or shutter speed, and will then fill in the other value for you. Analog light meters will usually give you a range of reciprocal values, from which you can choose your starting number and see what is paired with it.

For example, let's say that you have an outdoor, moving subject that you want to shoot handheld, on ISO 400 film. You know that you'd like to shoot at a shutter speed of 500 to fully stop its motion and your own motion. You set your light meter to “shutter priority”, select ISO 400 and a shutter speed of 500. You hold the meter out into the kind of light the subject is in and press the meter button. It tells you to shoot at f5.6. That makes you slightly nervous, as the depth of field will be fairly narrow. You'd rather shoot at f8. Luckily, you can shift your f-stop to f8 (less light) if you compensate by shooting at a slower shutter speed (more light). Shift your shutter speed to 250. That's still fast enough to stop motion, and gives you a better f-stop for your subject matter. You can verify this by changing your light meter's shutter speed to 250; it will then tell you to use f8.

A light meter is extremely useful, especially in strange or low lighting situations. But what if you don't have a light meter?

3.3.3 Sunny 16

For cases where you don't have a light meter or want to work fast by not using one, you can determine the exposure yourself using the old “Sunny 16” rule. It goes like this:

In bright sun, shoot at f16 and your shutter speed set to the reciprocal of your ISO.

For example, if your subject is out in the sun, and you're shooting with ISO 100 film, you'd shoot at a shutter speed of 100 (or whatever is closest, such as 125). If your subject is not in direct sunlight, you need to modify the formula:

Overcast: 2 stops brighter
In shade: 3 stops brighter
In snow or white background, in full sun: 2 stops darker

For example, if your subject is in the shade on a sunny day, and your ISO is 100, you would probably expose at f/5.6 and 100, or possibly f/8 and 50.

When shooting indoors, or with artificial light, or at night, Sunny 16 doesn't really work. In these conditions, you need a light meter, unless you are shooting digital or instant and can see the results and correct on the spot!

3.3.4 Neutral Density

Besides ISO, the other way to control exposure without changing aperture or shutter speed is with a neutral density filter. This filter cuts down the amount of light hitting the image plane. Neutral density

is generally rated as .6 density per stop. So an ND.6 will cut one stop of light, an ND 1.2 will cut two stops of light, etc. Often, however, ND makers drop the decimal place and refer to their filters as "ND6," "ND9," etc.

ND is particularly useful when you are shooting with a fast ISO and want to shoot at a lower f-stop.

Other filters also have ND-like effects. For example, a circular polarizing filter can cut up to two stops. Colored filters also have "filter factors," expressed in stops. When using these filters, you must take their filter factors into account when calculating your exposure.

3.4 Focusing

There are at least four methods for focusing your Mercury, each outlined below.

3.4.1 Ground Glass

Perhaps the most straightforward focusing method is to use ground glass. This requires a tripod to effectively use, but it is highly precise. Simply place a ground glass back on your Mercury and shade it from direct sunlight. Set your lens to the preview or T setting to open the shutter. Open the aperture all the way. You are now viewing the actual image produced by your lens.

To effectively focus on ground glass, you need a loupe to magnify one point of interest. Place the loupe directly against the glass surface. If you don't have a loupe, you can use an old lens, inverted. Place the camera side of the lens down against or near the ground glass surface. Look through the outer, subject side of the lens. This is cumbersome, but will effectively magnify your image.

Simply focus until it looks correct to you.

3.4.2 Range Finder

An accessory range finder is probably the best way to shoot handheld. This amazing little device gives you a viewfinder that you look through, with one image superimposed upon another. A wheel on the device can be turned as you're looking through the viewfinder. The object is to align the two images at the point at which you wish to focus. (Example: If you want to focus on a person's eye, make sure that their eye appears perfectly aligned, even if that means their ears look mis-aligned.)

Once you've achieved alignment for your focal plane, just look at the adjustment wheel. Which number is it indicating? This is your subject distance. Now simply transfer this number to the focus ring on your Focus Unit or lens. When the two numbers match, your subject is in focus.

You can also use the Depth of Field (DOF) scale to double-check your focus *range*. The lines on the DOF scale correspond to particular f-stops. Just look at the double lines associated with your current f-stop. What range of values on your focus ring fall within this range? This is, very roughly, the range of things that will be in focus. This is one way to visualize your margin of error. If your margin is

unacceptably narrow, change to a larger f-stop!

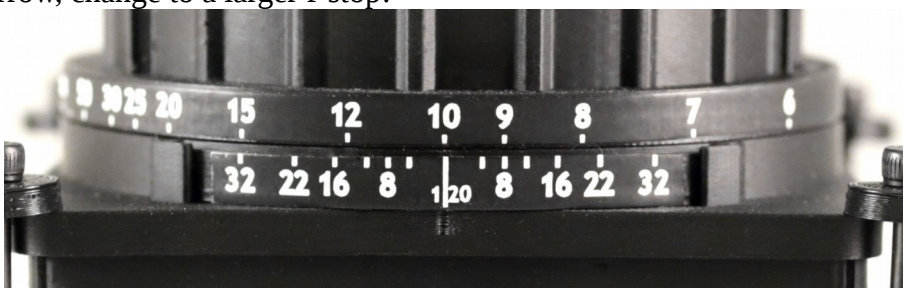

The Depth of Field scale shows that, for example, when focused on a subject 10ft away, at an f-stop of 16, everything from 8.5ft to 12ft is currently in focus.

3.4.3 Zone Focus

Zone focusing is the fastest method available for Mercury. It is commonly used for street photography. It also has the advantage of not requiring a range finder or any other accessories.

Zone focus requires skilled use of your Depth of Field and focus scales. The basic idea is this: Estimate a range of potential distances within which you feel comfortable your subject falls. Manipulate your focus ring and f-stop until you've attained this focus range. You can now safely point your camera at any subject within this distance range and take a photo, secure in the knowledge that it will be in focus.

A special case of zone focusing is *hyperfocal focusing*. The hyperfocal point is the focal distance of a particular lens at which everything from that distance to infinity is in focus. You can approximate the hyperfocal point by simply turning the focus dial until the current f-stop range (indicated on your DOF scale) brings infinity into it.

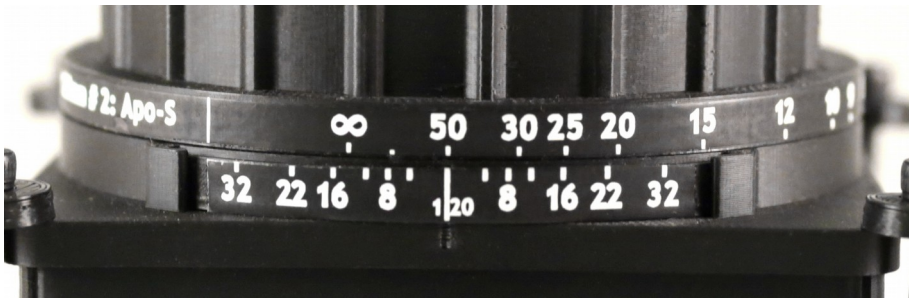

The Depth of Field scale tells us that at f/16, the hyperfocal distance is approximately 50ft. When set to this value, everything from 25ft to infinity will be in focus.

3.4.4 Laser Distance Finder

The fourth focus method for Mercury is to equip it with a laser distance finder. Some models can be mounted directly on a Mercury cold shoe via a special cold shoe adapter.

These devices can be rather inexpensive on Ebay. They take one or more batteries and, when on, can be used to determine distance. They have limited range, as they must shoot out a laser, which then bounces off of the target. A sensor on the device then reads the state of the laser, determining the distance of its bounce. Laser distance finders can be cheap, highly accurate, and highly visible at night. However, they require batteries and are significantly larger/heavier than the other methods outlined here. They also have significantly reduced range, especially in bright sun.

3.5 Exposing an Image

When you have set your exposure and focus, and are ready to expose your image, it is time to remove anything blocking the light path, then trigger your shutter.

Lens Cap: Time for an idiot check! Have you taken off your lens cap? You can do everything else with it on, forgetting that you won't expose anything if you don't take it off now...

Darkslide: If your back has a darkslide, you need to pull it now! There is no need to pull it all the way out of the back: only enough to clear the image.

Triggering: You can trigger your exposure by pressing the trigger on your shutter (if it has one). Or you can attach a shutter release cable to your shutter release port (if you have one) and press the button on your cable to take an exposure. If you are shooting handheld with a cable release, it should be threaded through your Mercury grip. This makes for a shake-free trigger. If you are shooting on a tripod, you should remove the cable release from the grip and hold it in the air, to avoid shaking the camera during triggering. Either way, be gentle and don't jerk the camera when you trigger your shot, or you will introduce blur into the photo.

3.6 Advancing/Ejecting Film

After exposing a photo, it is very important to *immediately* advance the film (if roll or cartridge film) to the next frame. In most roll film backs, this means unlocking the advance button by shifting it to the left, then cranking the lever or knob until it locks again and the frame counter shows the next number. If you don't train yourself to do this every time, without fail, you will find yourself double-exposing frames. Using this method, you'll always know that the number shown on your frame counter is the frame ready to be exposed.

When shooting sheet film, a frame is marked as exposed by flipping the darkslide over and re-inserting it. Generally one side of the darkslide handle is black, and the other silver or white. You can choose either side as your marker, but be consistent! (We use silver/white as unexposed, and black as exposed.)

When shooting digital, all you need to be concerned about after an exposure is that your digital back successfully wrote the image to card.

Once you've shot the last frame in a roll film back, advance it many extra times to ensure that the backing paper has been cleanly fed onto the takeup spool.

Chapter 4: Growing and Expanding Mercury

Because Mercury is never fixed, your individual camera and the system as a whole are both expandable. This chapter will offer some suggestions and options for areas to explore and ways to contribute to Mercury development.

4.1 Lenses

4.1.1 System vs. View Lenses

For a lens to work with the Mercury, the resulting configuration must contain the following elements:

> **Focusing** (if you wish to be able to change the focal plane to selectively focus at different distances).
> **Shutter** (to block light from exposing the recording medium before intended, and to time that exposure)
> **Iris** (to alter the amount of light that passes through the lens, and thereby change depth of field).

Historically, camera systems have distributed these functions in different ways. Any of these three features can be contained within the lens or within the camera body. For example, most large format camera bodies handle the focusing (via bellows), leaving shutter and iris to be housed within the lens. Most contemporary SLR and point-and-shoot style cameras place the iris and focusing mechanisms inside the lens and leave the shutter to the camera body. Some camera systems place all of these mechanisms in the lens, and some (such as pinhole cameras) place them all in the body, or omit them.

The Mercury can be configured in all of these ways, but if you are lens agnostic (i.e., you are looking to buy a lens and have no equipment compatibility concerns), we recommend the sort of lenses that contain a shutter and iris but do not contain a focusing mechanism. Typically these are referred to as "View Camera Lenses," or as we refer to them, "View Lenses." These are common in large format camera systems, as well as some medium format systems (especially of the past). The have been made for tiny cameras up to huge ones, and from very cheap consumer systems to the most expensive high-end professional ones. They have been around for a long time, and are readily available used, often quite inexpensively.

While we recommend View lenses for the Mercury as the number one preference, many different system lenses can be adapted to the Mercury. As mentioned above, these lenses tend to contain a focus mechanism, but rarely a shutter. This means that to adapt a system lens to the Mercury, you will need to add a shutter unit. The Mercury has been designed to utilize Ilex No. 4, Ilex No. 5, and Copal #3 shutters for these purposes. The shutter mounts directly to the camera body as one of its modules, and the lens mounts to that. This is slightly less elegant and more expensive than using a view lens, but it does work and can produce outstanding results.

For a further discussion of view vs. system lenses, see 39 .

4.1.2 Recommended Focal Lengths

It is always recommended to start out with a “normal” lens. View the chart below to discover the normal focal length (in red) for any given format.

Comparative Table of Format Size and Focal Length

Format	Image C.	Focal Length (mm)																		
35mm (135)	43mm	18	21	22	25	28	32	37	43	45	52	60	65	73	85	90	105	120	135	150
6x6cm	80mm	33	39	41	46	54	58	67	75	80	95	110	120	135	150	165	190	220	240	270
6x7cm	90mm	37	43	45	50	60	65	75	85	90	105	120	135	150	165	180	210	240	270	300
6x9cm (“2x3”)	100mm	42	48	52	58	65	75	90	100	105	120	135	150	170	180	210	240	270	300	340
6x12cm	125mm	53	60	65	75	85	90	105	120	135	150	180	195	210	240	260	300	340	380	430
4x5″	150mm	65	75	80	90	105	120	135	150	165	180	210	240	260	300	320	370	420	470	530
5x7″	210mm	90	105	110	125	150	160	180	210	240	260	300	330	350	400	440	500	570	640	720
8x10″	300mm	130	150	160	180	210	240	270	300	330	360	420	480	520	600	640	740	850	940	1050

This table is missing two formats that the Mercury can shoot: the extremely common 645 and special 2.4 x7cm (135 Pano).

645: minimum image circle: 60mm; normal lens is usually considered to be 70-80mm.

135 Pano: image circle is 75mm; lens characteristics are roughly similar to 6x6 (but with a very different relationship between width and height).

Once you have a normal lens, you may want to consider a wide or ultra-wide lens. Because Mercury shrinks or grows in size based on the focal length of its lens, the wider the lens, the smaller the camera! Plus, Mercury, unlike most other camera systems, is capable of mounting non-retrofocal ultra-wide lenses. These are “true wides,” lenses that are designed for very short flange distances, without any compromises. They produce distortion-free, aberration-free, very sharp and beautiful images. By contrast, retrofocal wides (which almost all wide-angle system lenses are) add many complex glass elements to refocus the image farther from its “natural” position. This allows the room necessary for clunky system cameras (mirror box, etc.), but isn't necessary with Mercury. It is therefore best to avoid wide angle system lenses and use true wide-angles instead. These are made by various companies, including Schneider (Super Angulon and Apo-Digitar series), Fuji (SWA), Rodenstock (Apo-Sironar), Nikon (Nikkor SW), and Zeiss (Biogon). Just don't confuse these view lenses with system lenses that may bear similar names.

Longer lenses are less desirable for Mercury use, as they extend the size of the camera. In general, 150mm is the longest lens you should consider. However, if you want a longer portrait lens, you can get either a telephoto view lens (telephoto lenses have shorter flange distances than their focal lengths) or a longer system lens. While system lenses fall short with wide angle designs, they often shine in

longer focal lengths, so if size and weight don't bother you, they are worth your consideration. For tested telephoto view lenses, see the Mercury Lens Database.

4.1.3 Mercury View Lens Database

See www.mercurycamera.com for the Mercury View Lens Database. This is a complete list of all view lenses that have been tested to work with Mercury, including all available specs. The database also lists "lens formulas" for various types of Mercury backs. This is the configuration you need to successfully mount the lens. In general, a lens formula includes a focus unit, front spacers, a particular shutter plate, and sometimes a lens barrel. Many lenses also have a full Lens Kit available that includes these components as well as a sportfinder reticule, Depth of Field scale, and focus scale (which comes as an adhesive strip and a focus ring to adhere it to).

The database also provides a quick visual reference to help you visualize which Mercury configs are and are not compatible with a particular lens, or alternately, which lenses are compatible with a particular config. This information is color coded in the "Standard Lens Stack" and "Rear Shifted Lens Stacks" sections of the sheet. Green squares indicate configs that will work well: they use standard components and don't require any compromises. Yellow configs require some special component(s) or have some limitations. Red configs are not recommended due to major limitations. Use this as a guide to help you pick out lenses or see what your current lenses are capable of in Mercury terms.

If you have technical information or feedback about a lens that is in the database, please email us at mercurycameraworks@gmail.com. If you are interested in testing and calibrating lenses to add to the database, please contact us as well.

4.2 Backs

4.2.1 Multiple Film Types

One of the great advantages to having removable film backs is that you can have multiple backs with you, each with a different kind of film loaded. If you have only one film back, you are losing this advantage entirely. The most popular option is to have one back loaded with color film, and another loaded with black and white. You can choose, for any given shot, whether it would be best in color or BW. Even more advanced user may wish to add chrome (slide) film to the mix, or instant film like Instax. You can go even further, of course, and add different film speeds or types (Portra for accurate colors, Ektar for punchy colors, etc.). Expanding your backs at hand is one of the easiest and most rewarding enhancements of your Mercury kit.

4.2.2 Multiple Film Formats

The next step to expand your Mercury may well be to increase the number of formats you can shoot. If you have a medium format kit, it is very easy to add larger (up to 6x9) or smaller (down to 645) roll film formats simply by purchasing the appropriate back on the used market (see our Graflok 23 Guide at www.mercurycamera.com for a breakdown of all backs available for each format).

However you may want to jump up to large format at some point. Large format is shot in sheets rather than rolls. 4X5 is the most common size. To move up to large format, all you need to do is purchase a Mercury Graflok 45 Back Adapter. This can replace your existing back adapter with only changing of four bolts. Now your Mercury is capable of shooting large format! This is a highly recommended upgrade for experienced Mercury users. If you want to shoot both medium and large format frequently, we recommend purchasing a second Mercury Front Panel with your back adapter. At that point you have two almost-complete cameras—all you need to do is transfer the lens stack between them. This will cause much less wear and tear on your cameras, and be far more convenient, than switching back adapters frequently.

Other more exotic back adapters all also available if you decide you'd like to use different backs, such as Hasselblad V backs, digital backs, Polaroid backs, Mamiya Press backs, etc.

4.2.3 Exotic Film Types

Besides 120 roll film, large format sheet film, and instant film formats such as Polaroid and Instax, you may wish to use exotic films such as 135 (35mm), 70mm, or 127/46mm. All of these are available via either third-party backs (70mm) or special Mercury conversion kits for existing third-party backs (135 and 127/46mm). Our conversion kits are for Mamiya RB67 backs, and can be found on our website.

4.2.4 Digital

Digital may seem a lot less exotic than film. Indeed, many Mercury users are trying to get away from digital photography. However, Mercury can offer an interesting twist on digital. For one thing, Mercury remains an entirely analog and manual camera. Shooting digital with no other electronics than the sensor itself can be very liberating! Also, the most logical digital match for Mercury is to use a medium format digital back, and these aren't anything like consumer digital cameras. Digital backs are made for extremely high end photography, and when new have always cost $16k and higher (usually much higher!). They are made to exacting specifications, usually employing a CCD sensor. CCD's quality, up until a few years ago, blew away CMOS. So even a 15 year old digital back will produce images that put current digital cameras to shame. The strongest advantage of digital backs, however, is that they tend to have very large sensors. A medium format sensor is generally at least 50% larger than even a top-of-the-line, “full frame” sensor from Canon, Sony, Nikon, etc. And amazingly, you can purchase an older, used medium format digital back for 1/4 the price of a current camera featuring one of those (much smaller) sensors! This is because typical consumers don't know what to

do with these backs, and tend to ignore them on the used market. Put another way, the barrier to entry (a whole new medium format camera system with its own lenses, etc.) is too high and requires too much research. As a Mercury user, however, you already have a camera capable of mounting nearly any medium format digital back ever made, from the late 1990s to the present day.

At some point in the future we will publish a guide to digital camera backs. For now, however, we recommend a particular line of backs: the Valeo, made by Leaf. These backs were quite popular with professional photographers from about 2001 through 2008. They can be found for reasonable prices. They require some extra components to work without being tethered to a computer, but Mercury Works has those available. We consider the Valeo the best value in digital backs, and a natural fit for Mercury. We have developed a new, compact control unit for the Valeo so it can write to standard CF cards. Ask us for more info if you are interested. We may even have a kit ready for you: when possible we repair, restore, and adapt these backs for efficient Mercury use.

4.2.5 Exotic Backs and Back Adapters

Yes, we can do Instax Wide (as well as Mini).

But if you want the coolest instant Mercury, you should probably consider our Polaroid 600 back adapter. It accepts a Polaroid CB-70 or CB-72 motorized Polaroid back. Use it to shoot old Polaroid film or current Impossible Project film, in color or black and white. Yes, this camera will turn heads…

Other exotic possibilities include a 5x7 back adapter and a Mamiya Universal Press integrated panel that accepts any standard Mercury lens stack, but also accepts any MUP back adapter or back.

Or, if you want to slim your Mercury down, you could use our Hasselblad V back adapter and mount Hasselblad or Kiev 88 6x6 backs. Or come up with some other plan…

4.3 Explore Other Shooting Styles

4.3.1 Street Photography

For street photography, you probably want a smaller back format (6x6 or 645, probably in the Graflok 23 mounting format), a wide angle lens (65mm or wider), and a range finder. You won't use the range finder all that often, though, as you'll want to zone focus (see earlier) to shoot quickly. The smaller format and wide angle lens will allow us, and help you to get more photos per roll.

4.3.2 Tripod Shooting

On the opposite end of the spectrum, Mercury's all-manual nature allows it to take very careful, considered photographs. Tripod shooting is particularly satisfying in this regard. Just get a fairly sturdy tripod that isn't too heavy (read online reviews!) and a ground glass back. When shooting on a tripod, you should definitely take advantage of the precision and beauty of ground glass!

4.3.3 Panorama Landscape Shooting

To shoot panoramas, you'll probably want a tripod and ground glass, along with either the Graflok 45 back adapter and a 6x12 roll film back, or a Graflok 23 back adapter and the Mercury 135 Pano Back Conversion Kit. This latter will allow you to shoot extremely long pano shots with standard 35mm film. Use slow, fine grain film (Fuji Velvia, Cinestill 50D, Ilford Delta 100, Ilford Pan F, Kodak Tmax 100) for the best effect.

4.4 Creating New Mercury Components

4.4.1 Creating your own lens kits

If you have a lens that isn't in the Mercury Lens Database, you can test it yourself with a digital back or ground glass. We have a Lens Testing Manual available that explains how to do it, and we will work with you to get a focus scale created from your tests.

If you have multiple lenses to test or ongoing needs, we suggest that you use one of our special Mercury Lens Testing Bodies. These are thin, special bodies that take an inexpensive digital camera (one version is for Canon EOS-M series cameras, and another is for any Micro 4/3 camera that doesn't have a sculpted hand grip). They are specially designed for lens testing and make the job much easier and more accurate.

4.4.2 Custom Mercuries

Mercury Works routinely makes custom Mercury kits. If you have a particular idea, contact us for a quote to make your concept a reality! If your parts get added to the future catalog, you will also receive perpetual credit for having sponsored that component.

4.4.3 Designing your own Components

Mercury is an open source system and you can design your own components for it. We highly recommend that you use Tinkercad, Autocad's free, online CAD program. Tinkercad projects can be

shared among multiple collaborators, and designed parts can be downloaded for 3D printing. You'll probably need a 3D printer (or access to one, or a collaborator who has one) for effective development. Look for one that prints ABS well (read the reviews!). Also, don't expect any printer that costs less than $800 to print reliably.

Mercury Works is happy to help you get started and to connect you to a community. Ultimately, Mercury is about community.

What will Mercury enable us to do, and what will we enable Mercury to do?

4.5 Where To Get More Information

Check out www.mercurycamera.com for all of our documentation, including instruction manuals, purchasing guides, and much more. All supplemental instructions mentioned in this User Guide are available at www.mercurycamera.com/downloads.

If you have specific questions for Mercury Works, email us at mercurycameraworks@gmail.com

To communicate with the amazing Mercury community, check out:

Our Flickr group: www.flickr.com/groups/mercurycamera/ (Please share your Mercury photos here!)

Our Facebook group: https://www.facebook.com/groups/mercuryworks/

Twitter: @MercuryCamera

Social Media: To reach and grow the larger Mercury community, be sure to tag us on Instagram and Twitter: #mercurycamera

Thank you for being part of the Mercury community!